Remote 16-Bit I/O Expander for Fm+ I²C-Bus with Interrupt

PCA9675

Last Updated: Apr 4, 2023

The PCA9675 provides general purpose remote I/O expansion for most microcontroller families via the two-line bidirectional bus (I²C-bus) and is a part of the Fast-mode Plus family.

The PCA9675 is a drop in upgrade for the PCF8575 providing higher Fast-mode Plus (Fm+) I²C-bus speeds (1 MHz versus 400 kHz) so that the output can support PWM dimming of LEDs, higher I²C-bus drive (30 mA versus 3 mA) so that many more devices can be on the bus without the need for bus buffers, higher total package sink capacity (400 mA versus 100 mA) that supports having all 25 mA LEDs on at the same time and more device addresses (64 versus 8) are available to allow many more devices on the bus without address conflicts.

The device consists of a 16-bit quasi-bidirectional port and an I²C-bus interface. The PCA9675 has a low current consumption and includes latched outputs with high current drive capability for directly driving LEDs.

It also possesses an interrupt line (INT) which can be connected to the interrupt logic of the microcontroller. By sending an interrupt signal on this line, the remote I/O can inform the microcontroller if there is incoming data on its ports without having to communicate via the I²C-bus. The internal Power-On Reset (POR) or software reset sequence initializes the I/Os as inputs.

PCA9675 BLOCK DIAGRAM Block Diagram

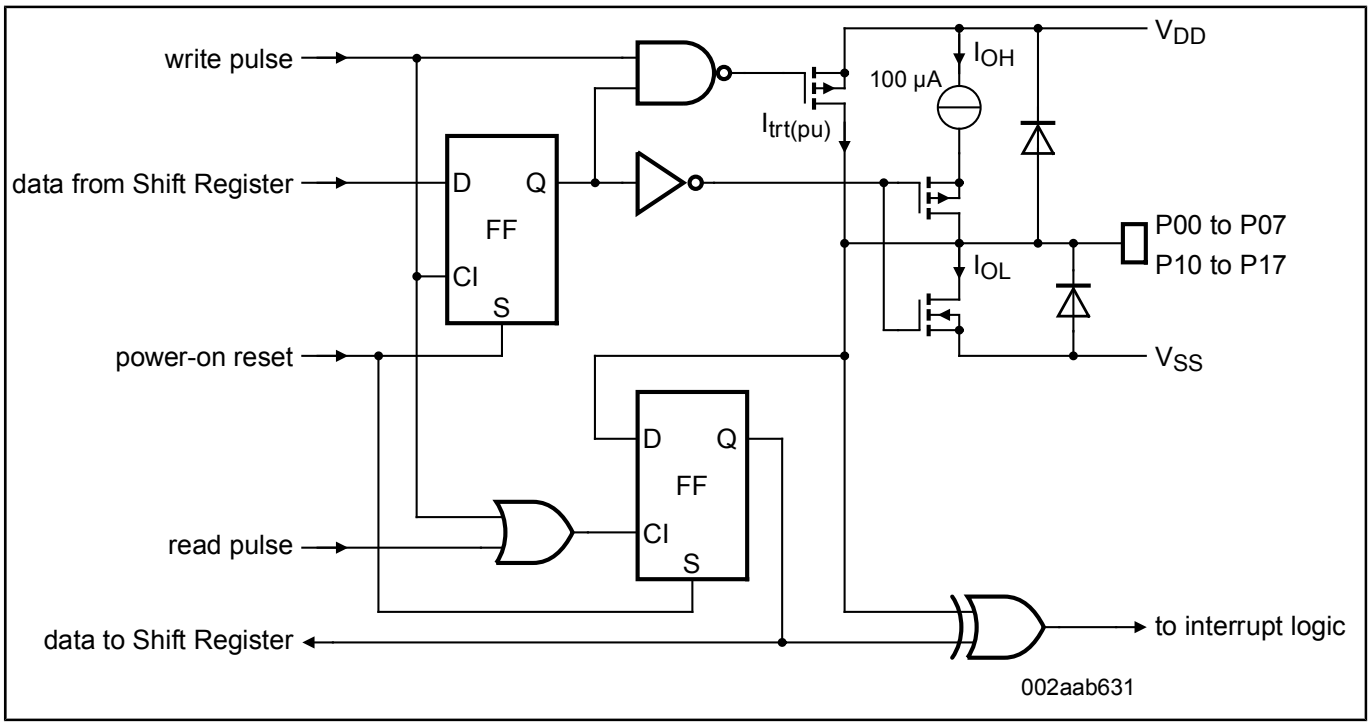

View additional information for Remote 16-Bit I/O Expander for Fm+ I²C-Bus with Interrupt.

Note: The information on this document is subject to change without notice.