Plastic single-ended surface-mounted package (LFPAK; Power-SO8); 4 leads **SOT669**

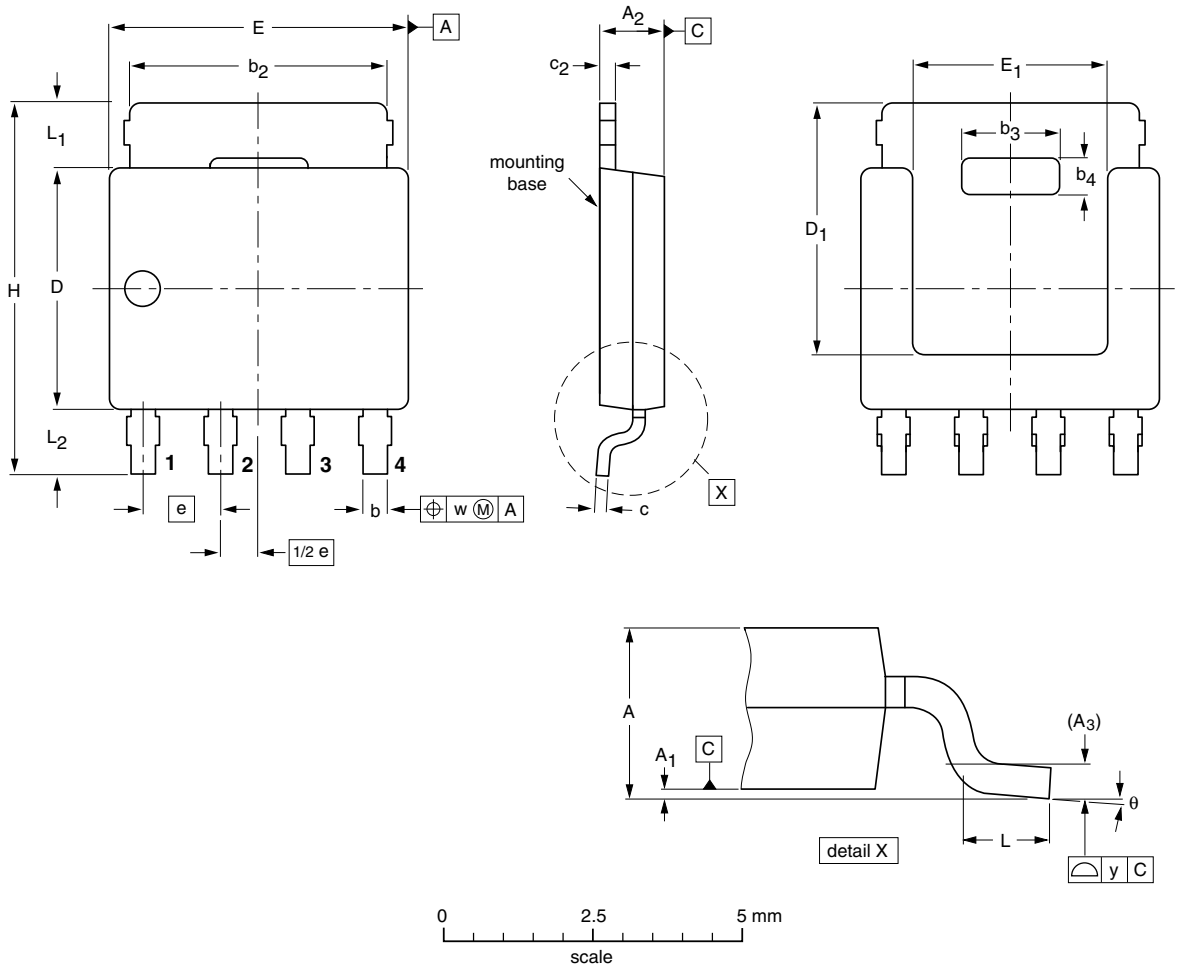

DIMENSIONS (mm are the original dimensions)

UNIT	A	A_1	A_2	A_3	b	b_2	b_3	b_4	c	c_2	D(1)	D_1(1) max	E(1)	E_1(1)	e	H	L	L_1	L_2	w	y	θ
mm	1.20 1.01	0.15 0.00	1.10 0.95	0.25	0.50 0.35	4.41 3.62	2.2 2.0	0.9 0.7	0.25 0.19	0.30 0.24	4.10 3.80	4.20	5.0 4.8	3.3 3.1	1.27	6.2 5.8	0.85 0.40	1.3 0.8	1.3 0.8	0.25	0.1	8° 0°

Note

1. Plastic or metal protrusions of 0.15 mm maximum per side are not included.

OUTLINE VERSION	REFERENCES				EUROPEAN PROJECTION	ISSUE DATE
	IEC	JEDEC	JEITA			
SOT669		MO-235				~~06-03-16~~ 11-03-25

© 2010 NXP B.V.
All rights reserved. Reproduction in whole or in part is prohibited without prior consent of the copyright owner. The information presented in this document does not form part of any quotation or contract, is believed to be accurate and reliable and may be changed without notice. No liability will be accepted by the publisher for any consequence of it's use. Publication thereof does not convey or imply any license under patent- or other industrial or intellectual property rights.

Printed in the Netherlands