Reflow soldering footprint

Footprint information for reflow soldering of plastic surface-mounted, 2 leads package **SOD123W**

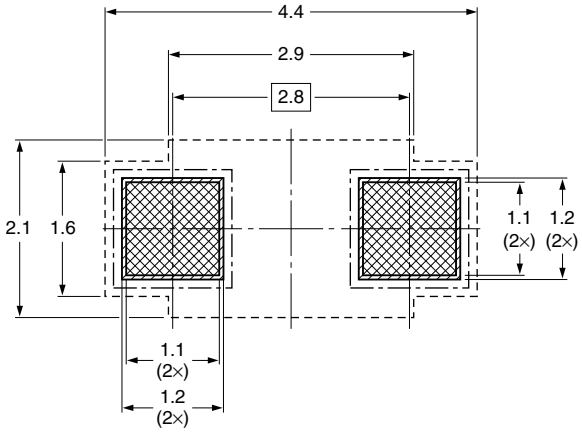

solder land

solder land plus solder paste

solder paste deposit

solder resist

occupied area

Dimensions in mm

sod123w_fr

© 2010 NXP B.V.
All rights reserved. Reproduction in whole or in part is prohibited without prior consent of the copyright owner. The information presented in this document does not form part of any quotation or contract, is believed to be accurate and reliable and may be changed without notice. No liability will be accepted by the publisher for any consequence of it's use. Publication thereof does not convey or imply any license under patent- or other industrial or intellectual property rights.

Printed in the Netherlands