## Contents

5 LBC & MISC
6 PCIE
7 USB
8 eTSECs & Zigbee
9 GBE PHY
10 CPU POWER
11 POWER SUPPLY

## Change list

| | |
|---|---|
| A1 | 1. Add 2x10 male JTAG header J12 for zigbee module |
| | 2. Separate CT pins of magnetic U1/U2 to save several mA current |
| | 3. Change MPC8308 pin Y23 from NC to VDD (net VCORE) per latest MPC8308EC Rev 2 |
| | 4. Remove DNP pull up resistors R42/R43 on net MDIO |
| | 5. EMI consideration<br>1) Change R140 from DNP to populate<br>2) Change C75/C78/C80/C93 from DNP to populate<br>3) Change C121/C122 decoupling capacitors for PHY VDDH from 0.1uF to 100pF<br>4) Add 18pF capacitors C359/C360 to GND on net TSEC1_GTX_CLK25 & TSEC2_GTX_CLK25<br>5) Change terminated series resistors R36/R37 on net G1_RX_CLK & G2_RX_CLK from 0ohm to 22ohm, add series bead L32/L31 and 18pF capacitors C363/C362 to GND<br>6) Add series bead L30/L31 and 18pF capacitors C361/C362 to GND on net G1_GTX_CLK & G2_GTX_CLK<br>7) Add bead L34/L35 on U6/U7 pin3 VDD33<br>8) Swap MDI interface on magnetic U1/U2 |
| | 6. Remove test point TP1~TP2, TP6~TP8, TP10~TP16, TP21, TP22, TP18 for layout space limitation |

## Revisions

| Rev | Description | Date | Approved |
|---|---|---|---|
| A | Release Rev. A | April 6,11 | |
| A1 | Add 2X10 JTAG Header for Zigbee Module<br>Changes for EMI consideration. Details refer to A1 change list. | June 24,11 | |
| B | Release Rev. B | June 30,11 | |

# MPC8308 - NSG

**Networking & Multimedia Group**
6501 William Cannon Drive West
Austin, TX 78735-8598

This document contains information proprietary to Freescale Semiconductor and shall not be used for engineering design, procurement or manufacture in whole or in part without the express written permission of Freescale Semiconductor.

ICAP Classification: FCP: FIUO: X PUBI:

Designer: James Zhang
Drawing Title: MPC8308 - NSG
Drawn by: James Zhang
Page Title: TITLE PAGE
Approved: Tanis Qiu
Size: C
Document Number: SCH-27072 PDF: SPF-27072
Rev: B
Date: Thursday, June 30, 2011

ecified:
ohms

2. Interrupted lines coded with the same letter or letter combinations are electrically connected.

3. Device type number is for reference only. The number varies with the manufacturer.

4. Special signal usage:
   # Denotes - Active-Low Signal
   <> or [] Denotes - Vectored Signals

5. Interpret diagram in accordance with American National Standards Institute specifications, current revision, with the exception of logic block symbology.

freescale™ semiconductor

ICAP Classification: FCP: ___ FIUO: X PUBI: ___

Drawing Title:
**MPC8308 - NSG**

Page Title:
**NOTES**

| Size | Document Number | Rev |
|---|---|---|
| C | SCH-27072 PDF: SPF-27072 | B |

Date: Thursday, June 30, 2011 Sheet 2 of 11

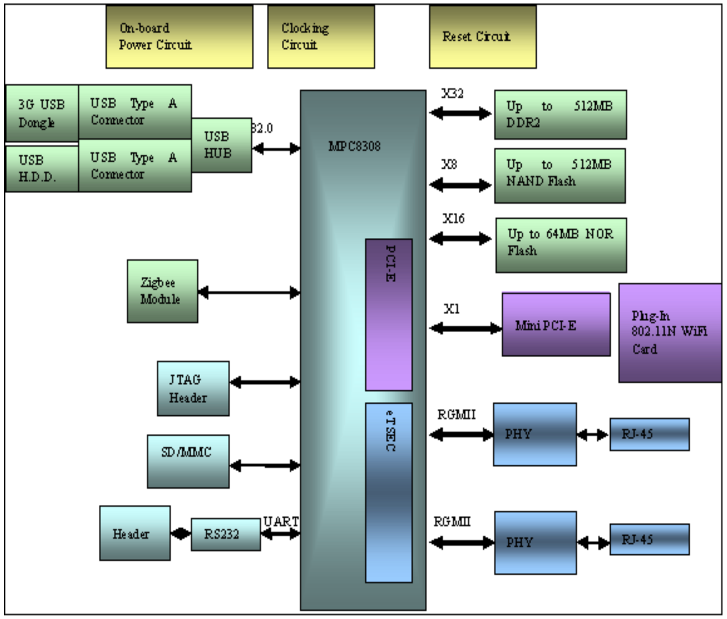
On-board
Power Circuit
Clocking
Circuit
Reset Circuit
3G USB
Dongle
USB Type A
Connector
USB
H.D.D.
USB Type A
Connector
USB
HUB
2.0
MPC8308
PCI-E
eTSEC
X32
Up to 512MB
DDR2
X8
Up to 512MB
NAND Flash
X16
Up to 64MB NOR
Flash
Zigbee
Module
X1
Mini PCI-E
Plug-In
802.11N WiFi
Card
JTAG
Header
SD/MMC
RGMII
PHY
RJ-45
Header
RS232
UART
RGMII
PHY
RJ-45

ICAP Classification: FCP: ___ FIUO: X PUBI: ___

Drawing Title:
**MPC8308 - NSG**

Page Title:
**BLOCK**

| Size | Document Number | Rev |
|---|---|---|
| C | SCH-27072 PDF: SPF-27072 | B |

Date: Thursday, June 30, 2011 Sheet 3 of 11

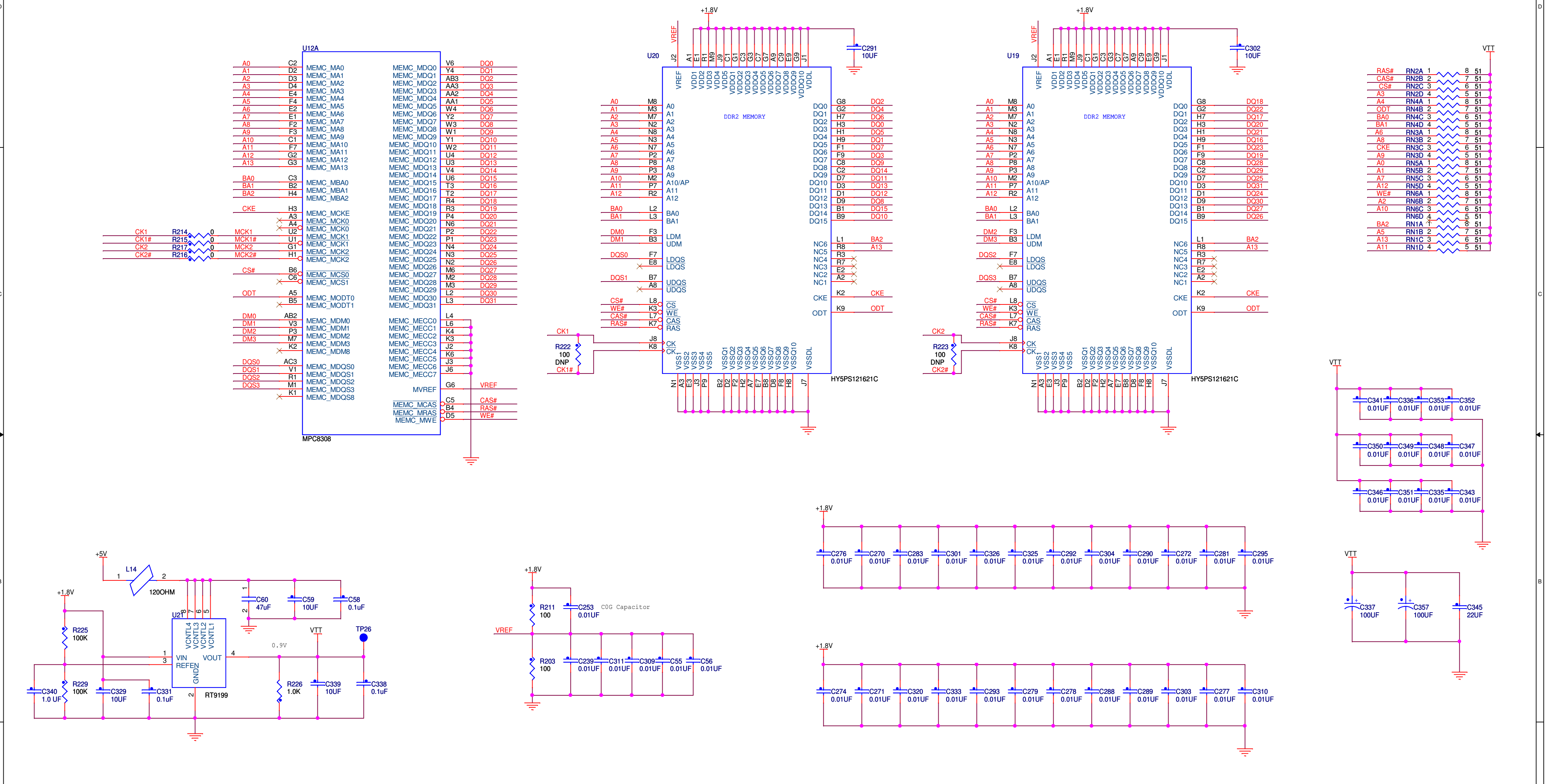
U12A
MPC8308
MEMC_MA0 … MEMC_MA13
MEMC_MBA0 MEMC_MBA1 MEMC_MBA2
MEMC_MCKE
MEMC_MCK0 MEMC_MCK1 MEMC_MCK2
MEMC_MCS0 MEMC_MCS1
MEMC_MODT0 MEMC_MODT1
MEMC_MDM0 … MEMC_MDM8
MEMC_MDQS0 … MEMC_MDQS8
MEMC_MDQ0 … MEMC_MDQ31
MEMC_MECC0 … MEMC_MECC7
MVREF
MEMC_MCAS MEMC_MRAS MEMC_MWE
R214 R215 R217 R216 0
CK1 CK1# CK2 CK2#
U20
U19
DDR2 MEMORY
HY5PS121621C
+1.8V
VREF
C291 10UF
C302 10UF
R222 100 DNP
R223 100 DNP
VTT
RN2A RN2B RN2C RN2D RN4A RN4B RN4C RN4D RN3A RN3B RN3C RN3D RN5A RN5B RN5C RN5D RN6A RN6B RN6C RN6D RN1A RN1B RN1C RN1D 51
C341 C336 C353 C352 C350 C349 C348 C347 C346 C351 C335 C343 0.01UF
C337 100UF
C357 100UF
C345 22UF
+5V
L14 120OHM
U21 RT9199
VIN REFEN VOUT GND VCNTL1 VCNTL2 VCNTL3 VCNTL4
C60 47uF
C59 10UF
C58 0.1uF
R225 100K
R229 100K
C340 1.0 UF
C329 10UF
C331 0.1uF
0.9V
TP26
R226 1.0K
C339 10UF
C338 0.1uF
R211 100
R203 100
C253 0.01UF
C0G Capacitor
C239 C311 C309 C55 C56 0.01UF
C276 C270 C283 C301 C326 C325 C292 C304 C290 C272 C281 C295 0.01UF
C274 C271 C320 C333 C293 C279 C278 C288 C289 C303 C277 C310 0.01UF

freescale semiconductor

| | | | |
|---|---|---|---|
| ICAP Classification: | FCP: ___ | FIUO: X | PUBI: ___ |

Drawing Title:
**MPC8308 - NSG**

Page Title:
**DDR2**

| Size | Document Number | Rev |
|---|---|---|
| C | SCH-27072 PDF: SPF-27072 | B |

Date: Thursday, June 30, 2011 Sheet 4 of 11

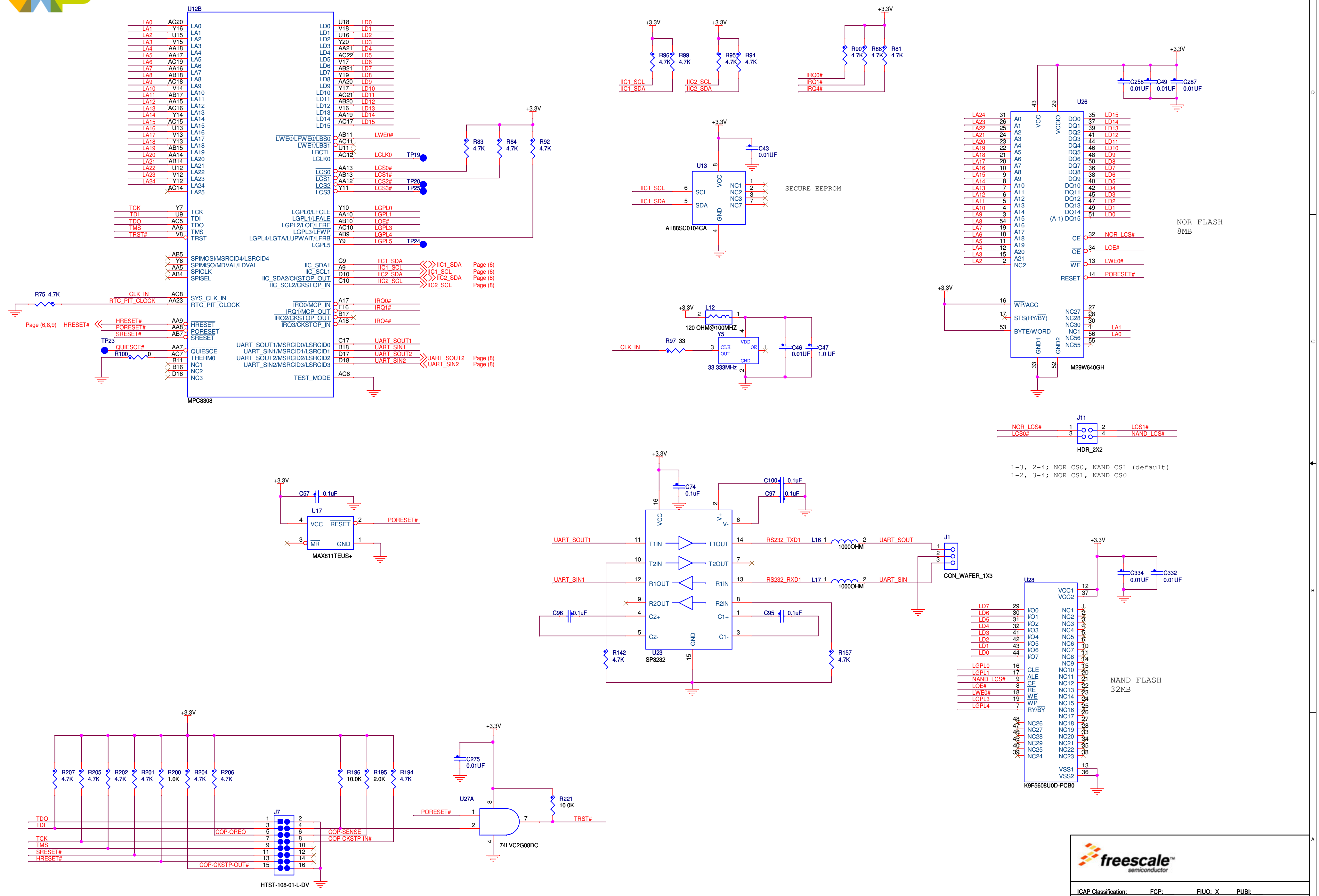

U12B
MPC8308
LA0
LA1
LA2
LA3
LA4
LA5
LA6
LA7
LA8
LA9
LA10
LA11
LA12
LA13
LA14
LA15
LA16
LA17
LA18
LA19
LA20
LA21
LA22
LA23
LA24
LA25
LD0
LD1
LD2
LD3
LD4
LD5
LD6
LD7
LD8
LD9
LD10
LD11
LD12
LD13
LD14
LD15
LWE0/LFWE0/LBS0
LWE1/LBS1
LBCTL
LCLK0
LCS0
LCS1
LCS2
LCS3
LGPL0/LFCLE
LGPL1/LFALE
LGPL2/LOE/LFRE
LGPL3/LFWP
LGPL4/LGTA/LUPWAIT/LFRB
LGPL5
TCK
TDI
TDO
TMS
TRST
SPIMOSI/MSRCID4/LSRCID4
SPIMISO/MDVAL/LDVAL
SPICLK
SPISEL
SYS_CLK_IN
RTC_PIT_CLOCK
HRESET
PORESET
SRESET
QUIESCE
THERM0
NC1
NC2
NC3
IIC_SDA1
IIC_SCL1
IIC_SDA2/CKSTOP_OUT
IIC_SCL2/CKSTOP_IN
IRQ0/MCP_IN
IRQ1/MCP_OUT
IRQ2/CKSTOP_OUT
IRQ3/CKSTOP_IN
UART_SOUT1/MSRCID0/LSRCID0
UART_SIN1/MSRCID1/LSRCID1
UART_SOUT2/MSRCID2/LSRCID2
UART_SIN2/MSRCID3/LSRCID3
TEST_MODE
LWE0#
LCLK0
LCS0#
LCS1#
LCS2#
LCS3#
LGPL0
LGPL1
LOE#
LGPL3
LGPL4
LGPL5
TP19
TP20
TP25
TP24
TP23
IIC1_SDA
IIC1_SCL
IIC2_SDA
IIC2_SCL
Page (6)
Page (8)
IRQ0#
IRQ1#
IRQ4#
UART_SOUT1
UART_SIN1
UART_SOUT2
UART_SIN2
R75 4.7K
CLK_IN
RTC_PIT_CLOCK
Page (6,8,9)
HRESET#
PORESET#
SRESET#
QUIESCE#
R100 0
R83 4.7K
R84 4.7K
R92 4.7K
+3.3V
R96 4.7K
R99 4.7K
R95 4.7K
R94 4.7K
R90 4.7K
R86 4.7K
R81 4.7K
IRQ0#
IRQ1#
IRQ4#
U13
AT88SC0104CA
SCL
SDA
VCC
GND
NC1
NC2
NC3
NC7
C43 0.01UF
SECURE EEPROM
L12
120 OHM@100MHZ
Y5
33.333MHz
CLK OUT
VDD
OE
GND
R97 33
C46 0.01UF
C47 1.0 UF
U26
M29W640GH
A0–A21
NC2
VCC
VCCIO
DQ0–DQ14
(A-1) DQ15
CE
OE
WE
RESET
WP/ACC
STS(RY/BY)
BYTE/WORD
NC27
NC28
NC30
NC1
NC56
NC55
GND1
GND2
NOR_LCS#
LOE#
LWE0#
PORESET#
LA1
LA0
C258 0.01UF
C49 0.01UF
C287 0.01UF
NOR FLASH
8MB
J11
HDR_2X2
NOR_LCS#
LCS0#
LCS1#
NAND_LCS#
1-3, 2-4; NOR CS0, NAND CS1 (default)
1-2, 3-4; NOR CS1, NAND CS0
U17
MAX811TEUS+
VCC
RESET
MR
GND
C57 0.1uF
PORESET#
U23
SP3232
VCC
V+
V-
T1IN
T1OUT
T2IN
T2OUT
R1OUT
R1IN
R2OUT
R2IN
C2+
C2-
C1+
C1-
GND
C74 0.1uF
C100 0.1uF
C97 0.1uF
C96 0.1uF
C95 0.1uF
R142 4.7K
R157 4.7K
UART_SOUT1
UART_SIN1
RS232_TXD1
RS232_RXD1
L16
L17
1000OHM
UART_SOUT
UART_SIN
J1
CON_WAFER_1X3
U28
K9F5608U0D-PCB0
VCC1
VCC2
I/O0–I/O7
CLE
ALE
CE
RE
WE
WP
RY/BY
NC1–NC30
VSS1
VSS2
LD7
LD6
LD5
LD4
LD3
LD2
LD1
LD0
LGPL0
LGPL1
NAND_LCS#
LOE#
LWE0#
LGPL3
LGPL4
C334 0.01UF
C332 0.01UF
NAND FLASH
32MB
R207 4.7K
R205 4.7K
R202 4.7K
R201 4.7K
R200 1.0K
R204 4.7K
R206 4.7K
R196 10.0K
R195 2.0K
R194 4.7K
J7
HTST-108-01-L-DV
TDO
TDI
TCK
TMS
SRESET#
HRESET#
COP-QREQ
COP-CKSTP-OUT#
COP-SENSE
COP-CKSTP-IN#
U27A
74LVC2G08DC
C275 0.01UF
R221 10.0K
PORESET#
TRST#

freescale semiconductor

ICAP Classification: FCP: ___ FIUO: X PUBI: ___

Drawing Title:

**MPC8308 - NSG**

Page Title:

**LBC & MISC**

| Size | Document Number | Rev |
|---|---|---|
| C | SCH-27072 PDF: SPF-27072 | B |

Date: Thursday, June 30, 2011 Sheet 5 of 11

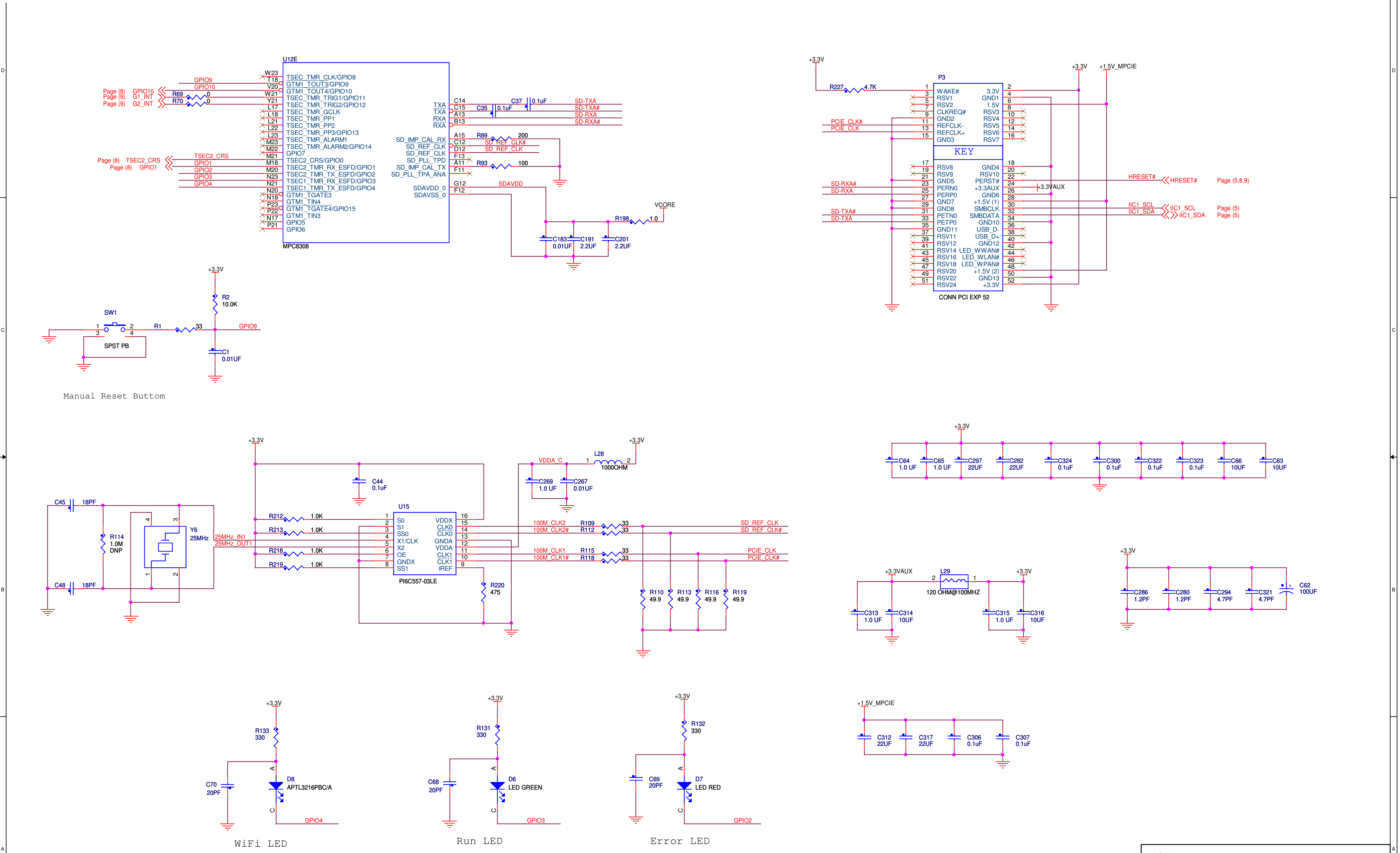
U12E
MPC8308
TSEC_TMR_CLK/GPIO8
GTM1_TOUT3/GPIO9
GTM1_TOUT4/GPIO10
TSEC_TMR_TRIG1/GPIO11
TSEC_TMR_TRIG2/GPIO12
TSEC_TMR_GCLK
TSEC_TMR_PP1
TSEC_TMR_PP2
TSEC_TMR_PP3/GPIO13
TSEC_TMR_ALARM1
TSEC_TMR_ALARM2/GPIO14
GPIO7
TSEC2_CRS/GPIO0
TSEC2_TMR_RX_ESFD/GPIO1
TSEC2_TMR_TX_ESFD/GPIO2
TSEC1_TMR_RX_ESFD/GPIO3
TSEC1_TMR_TX_ESFD/GPIO4
GTM1_TGATE3
GTM1_TIN4
GTM1_TGATE4/GPIO15
GTM1_TIN3
GPIO5
GPIO6
TXA
TXA
RXA
RXA
SD_IMP_CAL_RX
SD_REF_CLK
SD_REF_CLK
SD_PLL_TPD
SD_IMP_CAL_TX
SD_PLL_TPA_ANA
SDAVDD_0
SDAVSS_0
GPIO9
GPIO10
Page (8) GPIO10
Page (9) G1_INT
Page (9) G2_INT
R69 0
R70 0
Page (8) TSEC2_CRS
Page (8) GPIO1
TSEC2_CRS
GPIO1
GPIO2
GPIO3
GPIO4
C35 0.1uF
C37 0.1uF
SD-TXA
SD-TXA#
SD-RXA
SD-RXA#
R89 200
SD_REF_CLK#
SD_REF_CLK
R93 100
SDAVDD
VCORE
R198 1.0
C183 0.01UF
C191 2.2UF
C201 2.2UF
+3.3V
R2 10.0K
SW1
SPST PB
R1 33
GPIO9
C1 0.01UF
Manual Reset Buttom
+3.3V
R227 4.7K
P3
WAKE#
RSV1
RSV2
CLKREQ#
GND2
REFCLK-
REFCLK+
GND3
3.3V
GND1
1.5V
RSV3
RSV4
RSV5
RSV6
RSV7
KEY
RSV8
RSV9
GND5
PERN0
PERP0
GND7
GND8
PETN0
PETP0
GND11
RSV11
RSV12
RSV14
RSV16
RSV18
RSV20
RSV22
RSV24
GND4
RSV10
PERST#
+3.3AUX
GND6
+1.5V (1)
SMBCLK
SMBDATA
GND10
USB_D-
USB_D+
GND12
LED_WWAN#
LED_WLAN#
LED_WPAN#
+1.5V (2)
GND13
+3.3V
CONN PCI EXP 52
+1.5V_MPCIE
PCIE_CLK#
PCIE_CLK
SD-RXA#
SD-RXA
SD-TXA#
SD-TXA
+3.3VAUX
HRESET#
HRESET# Page (5,8,9)
IIC1_SCL
IIC1_SDA
IIC1_SCL Page (5)
IIC1_SDA Page (5)
+3.3V
C44 0.1uF
L28 1000OHM
VDDA_C
C269 1.0 UF
C267 0.01UF
C45 18PF
C48 18PF
R114 1.0M DNP
Y6 25MHz
25MHz_IN1
25MHz_OUT1
R212 1.0K
R213 1.0K
R218 1.0K
R219 1.0K
U15
S0
S1
SS0
X1/CLK
X2
OE
GNDX
SS1
VDDX
CLK0
CLK0
GNDA
VDDA
CLK1
CLK1
IREF
PI6C557-03LE
R220 475
100M_CLK2
100M_CLK2#
100M_CLK1
100M_CLK1#
R109 33
R112 33
R115 33
R118 33
SD_REF_CLK
SD_REF_CLK#
PCIE_CLK
PCIE_CLK#
R110 49.9
R113 49.9
R116 49.9
R119 49.9
C64 1.0 UF
C65 1.0 UF
C297 22UF
C282 22UF
C324 0.1uF
C300 0.1uF
C322 0.1uF
C323 0.1uF
C66 10UF
C63 10UF
L29 120 OHM@100MHZ
C313 1.0 UF
C314 10UF
C315 1.0 UF
C316 10UF
C286 1.2PF
C280 1.2PF
C294 4.7PF
C321 4.7PF
C62 100UF
C312 22UF
C317 22UF
C306 0.1uF
C307 0.1uF
R133 330
D8 APTL3216PBC/A
C70 20PF
GPIO4
WiFi LED
R131 330
D6 LED GREEN
C68 20PF
GPIO3
Run LED
R132 330
D7 LED RED
C69 20PF
GPIO2
Error LED

freescale semiconductor

ICAP Classification: FCP: ___ FIUO: X PUBI: ___

Drawing Title:

**MPC8308 - NSG**

Page Title:

**PCIE**

| Size | Document Number | Rev |
|---|---|---|
| C | SCH-27072 PDF: SPF-27072 | B |

Date: Thursday, June 30, 2011 Sheet 6 of 11

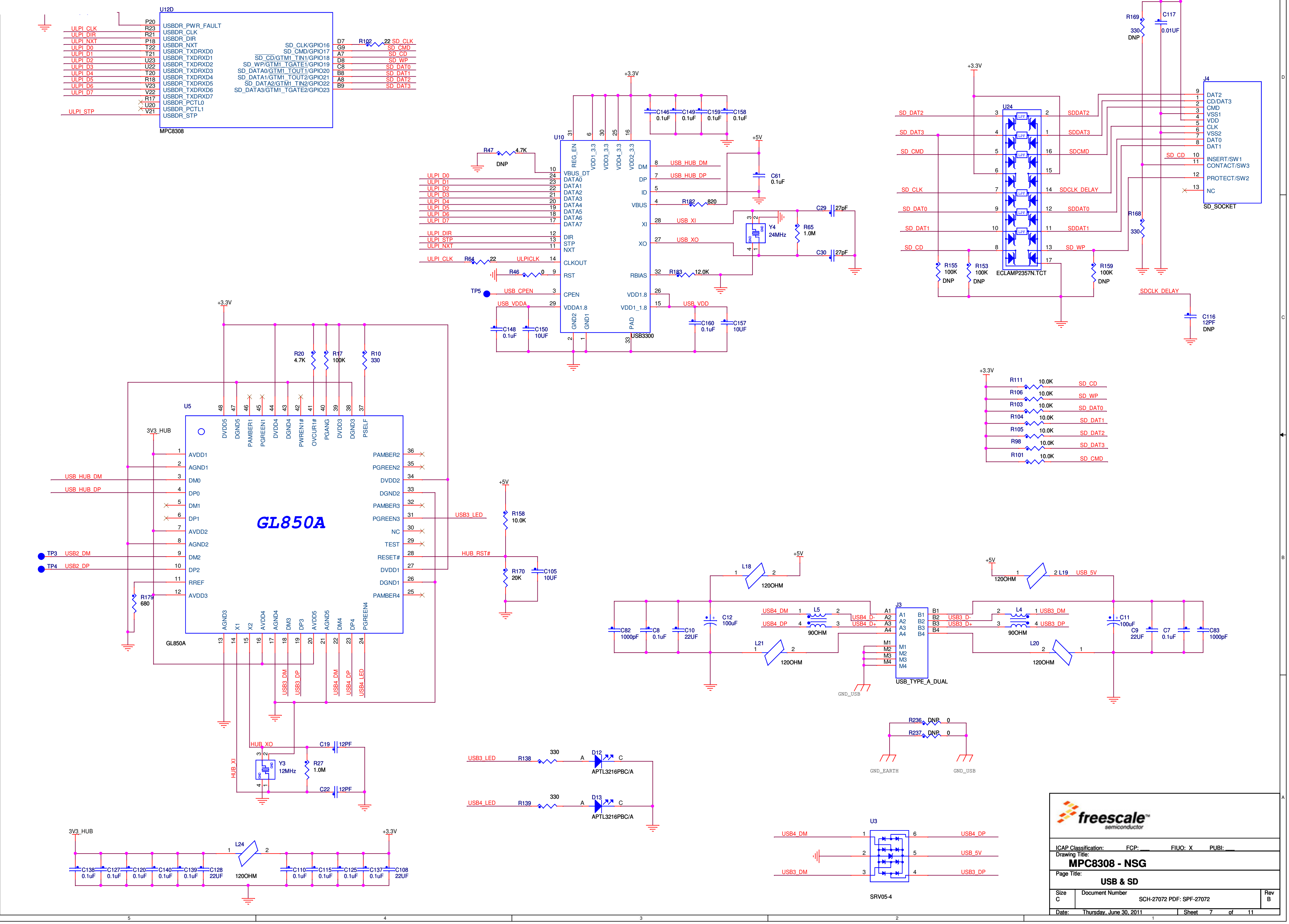
U12D
MPC8308
USBDR_PWR_FAULT
USBDR_CLK
USBDR_DIR
USBDR_NXT
USBDR_TXDRXD0
USBDR_TXDRXD7
USBDR_PCTL0
USBDR_PCTL1
USBDR_STP
SD_CLK/GPIO16
SD_CMD/GPIO17
SD_CD/GTM1_TIN1/GPIO18
SD_WP/GTM1_TGATE1/GPIO19
SD_DATA0/GTM1_TOUT1/GPIO20
SD_DATA1/GTM1_TOUT2/GPIO21
SD_DATA2/GTM1_TIN2/GPIO22
SD_DATA3/GTM1_TGATE2/GPIO23
ULPI_CLK
ULPI_DIR
ULPI_NXT
ULPI_D0
ULPI_D7
ULPI_STP
U10
USB3300
REG_EN
VDD1_3.3
VDD3_3.3
VDD4_3.3
VDD2_3.3
VBUS_DT
DATA0
DATA7
DIR
STP
NXT
CLKOUT
RST
CPEN
VDDA1.8
GND2
GND1
PAD
DM
DP
ID
VBUS
XI
XO
RBIAS
VDD1.8
VDD1_1.8
USB_HUB_DM
USB_HUB_DP
USB_XI
USB_XO
USB_CPEN
USB_VDDA
USB_VDD
Y4
24MHz
TP5
U24
ECLAMP2357N.TCT
J4
SD_SOCKET
DAT2
CD/DAT3
CMD
VSS1
VDD
CLK
VSS2
DAT0
DAT1
INSERT/SW1
CONTACT/SW3
PROTECT/SW2
NC
SDCLK_DELAY
+3.3V
+5V
U5
GL850A
3V3_HUB
AVDD1
AGND1
DM0
DP0
DM1
DP1
AVDD2
AGND2
DM2
DP2
RREF
AVDD3
PAMBER2
PGREEN2
DVDD2
DGND2
PAMBER3
PGREEN3
NC
TEST
RESET#
DVDD1
DGND1
PAMBER4
DVDD5
DGND5
PAMBER1
PGREEN1
DVDD4
DGND4
PWREN1#
OVCUR1#
PGANG
DVDD3
DGND3
PSELF
AGND3
X1
X2
AVDD4
AGND4
DM3
DP3
AVDD5
AGND5
DM4
DP4
PGREEN4
TP3
TP4
USB2_DM
USB2_DP
USB3_LED
HUB_RST#
HUB_XO
HUB_XI
Y3
12MHz
USB3_DM
USB3_DP
USB4_DM
USB4_DP
USB4_LED
L18
L19
L20
L21
L24
120OHM
L4
L5
90OHM
J3
USB_TYPE_A_DUAL
USB_5V
GND_USB
GND_EARTH
D12
D13
APTL3216PBC/A
U3
SRV05-4

freescale semiconductor

ICAP Classification: FCP: ___ FIUO: X PUBI: ___

Drawing Title:

**MPC8308 - NSG**

Page Title:

**USB & SD**

| Size | Document Number | Rev |
|---|---|---|
| C | SCH-27072 PDF: SPF-27072 | B |

Date: Thursday, June 30, 2011 Sheet 7 of 11

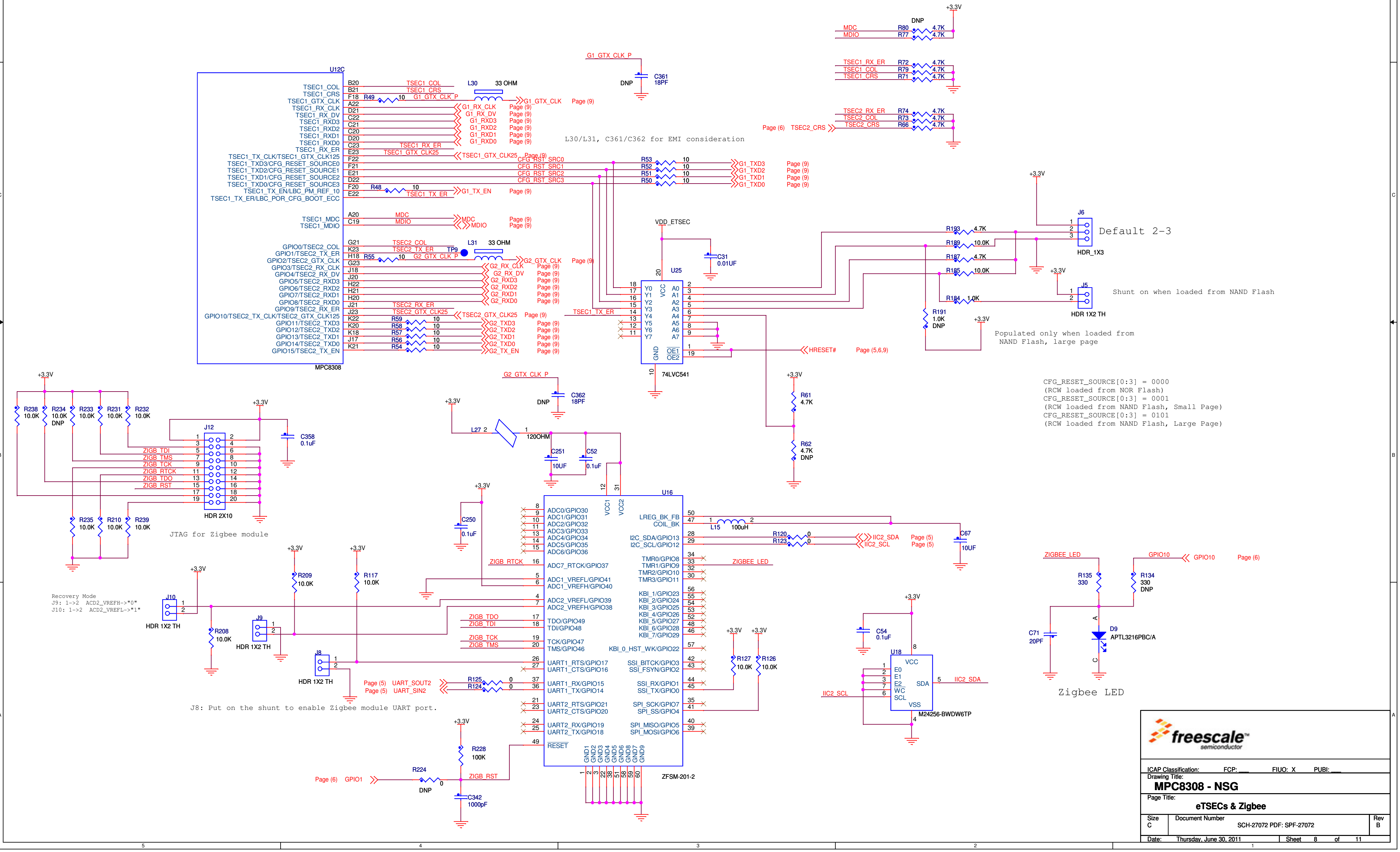
U12C
MPC8308
TSEC1_COL
TSEC1_CRS
TSEC1_GTX_CLK
TSEC1_RX_CLK
TSEC1_RX_DV
TSEC1_RXD3
TSEC1_RXD2
TSEC1_RXD1
TSEC1_RXD0
TSEC1_RX_ER
TSEC1_TX_CLK/TSEC1_GTX_CLK125
TSEC1_TXD3/CFG_RESET_SOURCE0
TSEC1_TXD2/CFG_RESET_SOURCE1
TSEC1_TXD1/CFG_RESET_SOURCE2
TSEC1_TXD0/CFG_RESET_SOURCE3
TSEC1_TX_EN/LBC_PM_REF_10
TSEC1_TX_ER/LBC_POR_CFG_BOOT_ECC
TSEC1_MDC
TSEC1_MDIO
GPIO0/TSEC2_COL
GPIO1/TSEC2_TX_ER
GPIO2/TSEC2_GTX_CLK
GPIO3/TSEC2_RX_CLK
GPIO4/TSEC2_RX_DV
GPIO5/TSEC2_RXD3
GPIO6/TSEC2_RXD2
GPIO7/TSEC2_RXD1
GPIO8/TSEC2_RXD0
GPIO9/TSEC2_RX_ER
GPIO10/TSEC2_TX_CLK/TSEC2_GTX_CLK125
GPIO11/TSEC2_TXD3
GPIO12/TSEC2_TXD2
GPIO13/TSEC2_TXD1
GPIO14/TSEC2_TXD0
GPIO15/TSEC2_TX_EN
L30 33 OHM
L31 33 OHM
TP9
G1_GTX_CLK Page (9)
G2_GTX_CLK Page (9)
C361 18PF DNP
C362 18PF DNP
VDD_ETSEC
C31 0.01UF
U25 74LVC541
HRESET# Page (5,6,9)
J6 HDR_1X3
Default 2-3
J5 HDR 1X2 TH
Shunt on when loaded from NAND Flash
Populated only when loaded from NAND Flash, large page
R191 1.0K DNP
R61 4.7K
R62 4.7K DNP
MDC
MDIO
TSEC2_CRS Page (6)
J12 HDR 2X10
JTAG for Zigbee module
ZIGB_TDI
ZIGB_TMS
ZIGB_TCK
ZIGB_RTCK
ZIGB_TDO
ZIGB_RST
C358 0.1uF
L27 120OHM
C251 10UF
C52 0.1uF
C250 0.1uF
U16 ZFSM-201-2
L15 100uH
C67 10UF
IIC2_SDA Page (5)
IIC2_SCL Page (5)
ZIGBEE_LED
GPIO10 Page (6)
R135 330
R134 330 DNP
C71 20PF
D9 APTL3216PBC/A
Zigbee LED
U18 M24256-BWDW6TP
C54 0.1uF
J10 HDR 1X2 TH
J9 HDR 1X2 TH
J8 HDR 1X2 TH
UART_SOUT2 Page (5)
UART_SIN2 Page (5)
R228 100K
R224 0 DNP
C342 1000pF
GPIO1 Page (6)
+3.3V

L30/L31, C361/C362 for EMI consideration

Shunt on when loaded from NAND Flash

Populated only when loaded from NAND Flash, large page

CFG_RESET_SOURCE[0:3] = 0000
(RCW loaded from NOR Flash)
CFG_RESET_SOURCE[0:3] = 0001
(RCW loaded from NAND Flash, Small Page)
CFG_RESET_SOURCE[0:3] = 0101
(RCW loaded from NAND Flash, Large Page)

Recovery Mode
J9: 1->2 ACD2_VREFH->"0"
J10: 1->2 ACD2_VREFL->"1"

J8: Put on the shunt to enable Zigbee module UART port.

ICAP Classification: FCP: ___ FIUO: X PUBI: ___
Drawing Title:
**MPC8308 - NSG**
Page Title:
**eTSECs & Zigbee**
Size C
Document Number SCH-27072 PDF: SPF-27072
Rev B
Date: Thursday, June 30, 2011
Sheet 8 of 11

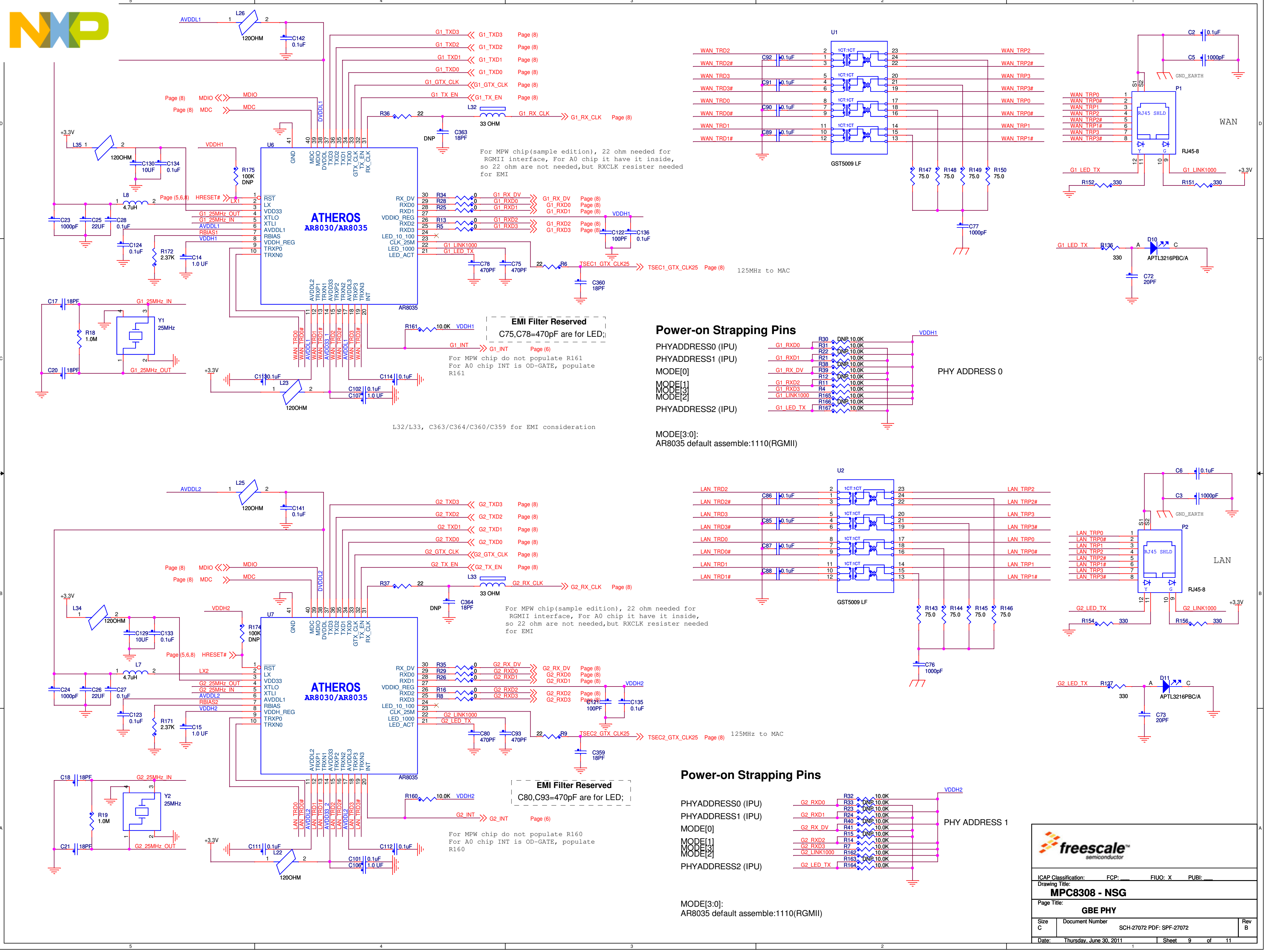

AVDDL1
L26
120OHM
C142 0.1uF
G1_TXD3
G1_TXD2
G1_TXD1
G1_TXD0
G1_GTX_CLK
G1_TX_EN
MDIO
MDC
G1_RX_CLK
R36 22
L32 33 OHM
C363 18PF
DNP
U6
ATHEROS
AR8030/AR8035
AR8035
L35 120OHM
C130 10UF
C134 0.1uF
VDDH1
R175 100K DNP
L8 4.7uH
HRESET#
LX1
G1_25MHz_OUT
G1_25MHz_IN
RBIAS1
R172 2.37K
C14 1.0 UF
C23 1000pF
C25 22UF
C28 0.1uF
C124 0.1uF
RST LX VDD33 XTLO XTLI AVDDL1 RBIAS VDDH_REG TRXP0 TRXN0
RX_DV RXD0 RXD1 VDDIO_REG RXD2 RXD3 LED_10_100 CLK_25M LED_1000 LED_ACT
R34 R28 R25 R13 R5
G1_RX_DV G1_RXD0 G1_RXD1 G1_RXD2 G1_RXD3
G1_LINK1000 G1_LED_TX
C122 100PF
C136 0.1uF
C78 470PF
C75 470PF
R6 22
TSEC1_GTX_CLK25
C360 18PF
C17 18PF
C20 18PF
R18 1.0M
Y1 25MHz
R161 10.0K
G1_INT
C118 0.1uF
L23 120OHM
C114 0.1uF
C102 0.1uF
C107 1.0 UF
WAN_TRD0 WAN_TRD0# WAN_TRD1 WAN_TRD1# WAN_TRD2 WAN_TRD2# WAN_TRD3 WAN_TRD3#
U1
GST5009 LF
1CT:1CT
C92 0.1uF
C91 0.1uF
C90 0.1uF
C89 0.1uF
WAN_TRP0 WAN_TRP0# WAN_TRP1 WAN_TRP1# WAN_TRP2 WAN_TRP2# WAN_TRP3 WAN_TRP3#
R147 75.0
R148 75.0
R149 75.0
R150 75.0
C77 1000pF
C2 0.1uF
C5 1000pF
GND_EARTH
P1
RJ45 SHLD
RJ45-8
WAN
G1_LED_TX
G1_LINK1000
R152 330
R151 330
R136 330
D10
APTL3216PBC/A
C72 20PF
Page (8)
Page (6)
Page (5,6,8)
AVDDL2
L25
C141 0.1uF
G2_TXD3
G2_TXD2
G2_TXD1
G2_TXD0
G2_GTX_CLK
G2_TX_EN
G2_RX_CLK
R37 22
L33 33 OHM
C364 18PF
U7
L34 120OHM
C129 10UF
C133 0.1uF
VDDH2
R174 100K DNP
L7 4.7uH
LX2
G2_25MHz_OUT
G2_25MHz_IN
RBIAS2
R171 2.37K
C15 1.0 UF
C24 1000pF
C26 22UF
C27 0.1uF
C123 0.1uF
R35 R29 R26 R16 R8
G2_RX_DV G2_RXD0 G2_RXD1 G2_RXD2 G2_RXD3
G2_LINK1000 G2_LED_TX
C121 100PF
C135 0.1uF
C80 470PF
C93 470PF
R9 22
TSEC2_GTX_CLK25
C359 18PF
C18 18PF
C21 18PF
R19 1.0M
Y2 25MHz
R160 10.0K
G2_INT
C111 0.1uF
L22 120OHM
C112 0.1uF
C101 0.1uF
C106 1.0 UF
LAN_TRD0 LAN_TRD0# LAN_TRD1 LAN_TRD1# LAN_TRD2 LAN_TRD2# LAN_TRD3 LAN_TRD3#
U2
C86 0.1uF
C85 0.1uF
C87 0.1uF
C88 0.1uF
LAN_TRP0 LAN_TRP0# LAN_TRP1 LAN_TRP1# LAN_TRP2 LAN_TRP2# LAN_TRP3 LAN_TRP3#
R143 75.0
R144 75.0
R145 75.0
R146 75.0
C76 1000pF
C6 0.1uF
C3 1000pF
P2
LAN
R154 330
R156 330
R137 330
D11
APTL3216PBC/A
C73 20PF
+3.3V

For MPW chip(sample edition), 22 ohm needed for RGMII interface, For A0 chip it have it inside, so 22 ohm are not needed,but RXCLK resister needed for EMI

125MHz to MAC

EMI Filter Reserved
C75,C78=470pF are for LED;

For MPW chip do not populate R161
For A0 chip INT is OD-GATE, populate R161

L32/L33, C363/C364/C360/C359 for EMI consideration

## Power-on Strapping Pins

| | | | |
|---|---|---|---|
| PHYADDRESS0 (IPU) | G1_RXD0 | R30 DNP 10.0K<br>R31 10.0K | |
| PHYADDRESS1 (IPU) | G1_RXD1 | R22 DNP 10.0K<br>R21 10.0K | |
| MODE[0] | G1_RX_DV | R38 DNP 10.0K<br>R39 10.0K | PHY ADDRESS 0 |
| MODE[1] | G1_RXD2 | R12 DNP 10.0K<br>R11 10.0K | |
| MODE[3] | G1_RXD3 | R4 10.0K | |
| MODE[2] | G1_LINK1000 | R165 10.0K | |
| PHYADDRESS2 (IPU) | G1_LED_TX | R166 DNP 10.0K<br>R167 10.0K | |

MODE[3:0]:
AR8035 default assemble:1110(RGMII)

For MPW chip(sample edition), 22 ohm needed for RGMII interface, For A0 chip it have it inside, so 22 ohm are not needed,but RXCLK resister needed for EMI

125MHz to MAC

EMI Filter Reserved
C80,C93=470pF are for LED;

For MPW chip do not populate R160
For A0 chip INT is OD-GATE, populate R160

## Power-on Strapping Pins

| | | | |
|---|---|---|---|
| PHYADDRESS0 (IPU) | G2_RXD0 | R32 10.0K<br>R33 DNP 10.0K | |
| PHYADDRESS1 (IPU) | G2_RXD1 | R23 DNP 10.0K<br>R24 10.0K | |
| MODE[0] | G2_RX_DV | R40 DNP 10.0K<br>R41 10.0K | PHY ADDRESS 1 |
| MODE[1] | G2_RXD2 | R15 DNP 10.0K<br>R14 10.0K | |
| MODE[3] | G2_RXD3 | R7 10.0K | |
| MODE[2] | G2_LINK1000 | R162 10.0K | |
| PHYADDRESS2 (IPU) | G2_LED_TX | R163 DNP 10.0K<br>R164 10.0K | |

MODE[3:0]:
AR8035 default assemble:1110(RGMII)

freescale semiconductor

ICAP Classification: FCP: ___ FIUO: X PUBI: ___
Drawing Title:
MPC8308 - NSG
Page Title:
GBE PHY
Size: C
Document Number: SCH-27072 PDF: SPF-27072
Rev: B
Date: Thursday, June 30, 2011
Sheet 9 of 11

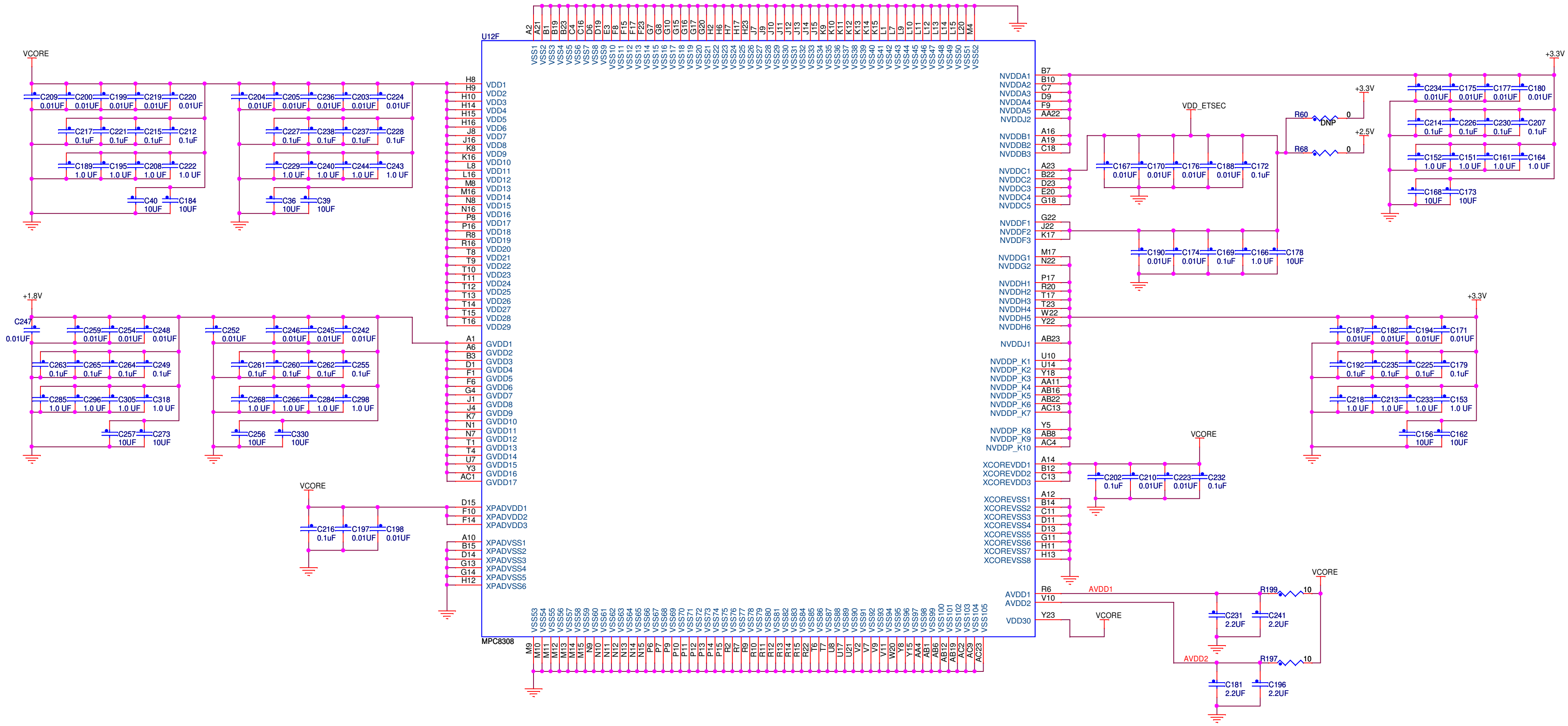
U12F
MPC8308
VCORE
+1.8V
+3.3V
+2.5V
VDD_ETSEC
R60 DNP 0
R68 0
R199 10
R197 10
AVDD1
AVDD2
VDD1 … VDD29
GVDD1 … GVDD17
XPADVDD1
XPADVDD2
XPADVDD3
XPADVSS1 … XPADVSS6
VSS1 … VSS105
NVDDA1 … NVDDA5
NVDDJ2
NVDDB1
NVDDB2
NVDDB3
NVDDC1 … NVDDC5
NVDDF1
NVDDF2
NVDDF3
NVDDG1
NVDDG2
NVDDH1 … NVDDH6
NVDDJ1
NVDDP_K1 … NVDDP_K10
XCOREVDD1
XCOREVDD2
XCOREVDD3
XCOREVSS1 … XCOREVSS8
AVDD1
AVDD2
VDD30
0.01UF
0.1uF
1.0 UF
10UF
2.2UF

ICAP Classification: FCP: ___ FIUO: X PUBI: ___

Drawing Title:
**MPC8308 - NSG**

Page Title:
**CPU Power**

| Size | Document Number | Rev |
|---|---|---|
| C | SCH-27072 PDF: SPF-27072 | B |

Date: Thursday, June 30, 2011 Sheet 10 of 11

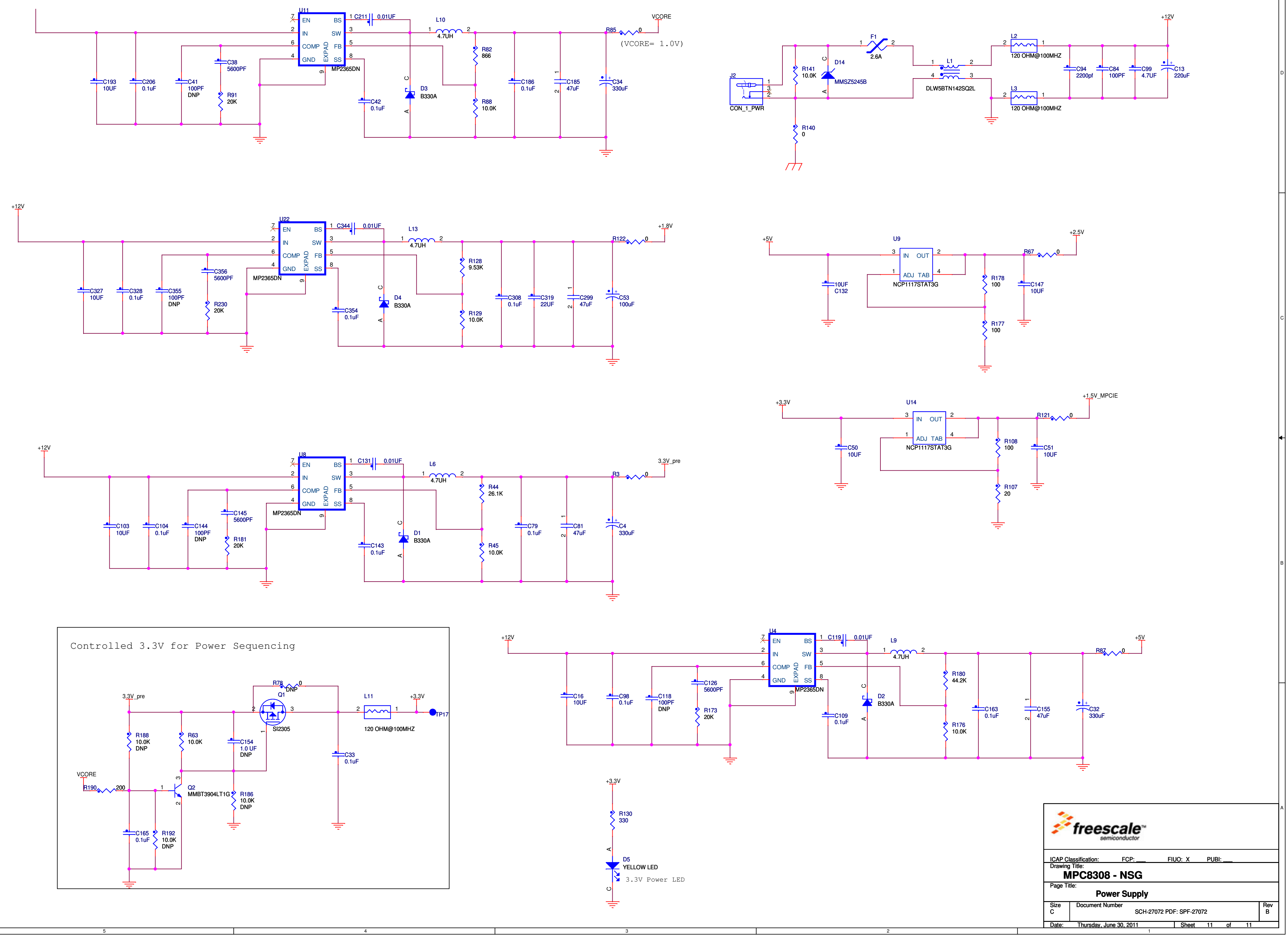

U11
MP2365DN
EN BS IN SW COMP FB GND SS EXPAD
C211 0.01UF
L10 4.7UH
R85 0
VCORE
(VCORE= 1.0V)
C193 10UF
C206 0.1uF
C41 100PF DNP
C38 5600PF
R91 20K
C42 0.1uF
D3 B330A
R82 866
R88 10.0K
C186 0.1uF
C185 47uF
C34 330uF
J2
CON_1_PWR
R141 10.0K
R140 0
D14 MMSZ5245B
F1 2.6A
L1 DLW5BTN142SQ2L
L2 120 OHM@100MHZ
L3 120 OHM@100MHZ
C94 2200pf
C84 100PF
C99 4.7UF
C13 220uF
+12V
U22
MP2365DN
C344 0.01UF
L13 4.7UH
R122 0
+1.8V
C327 10UF
C328 0.1uF
C355 100PF DNP
C356 5600PF
R230 20K
C354 0.1uF
D4 B330A
R128 9.53K
R129 10.0K
C308 0.1uF
C319 22UF
C299 47uF
C53 100uF
+5V
U9
NCP1117STAT3G
IN OUT ADJ TAB
R67 0
+2.5V
C132 10UF
R178 100
R177 100
C147 10UF
+3.3V
U14
NCP1117STAT3G
R121 0
+1.5V_MPCIE
C50 10UF
R108 100
R107 20
C51 10UF
U8
MP2365DN
C131 0.01UF
L6 4.7UH
R3 0
3.3V_pre
C103 10UF
C104 0.1uF
C144 100PF DNP
C145 5600PF
R181 20K
C143 0.1uF
D1 B330A
R44 26.1K
R45 10.0K
C79 0.1uF
C81 47uF
C4 330uF
Controlled 3.3V for Power Sequencing
R78 0 DNP
Q1 SI2305
L11 120 OHM@100MHZ
TP17
R188 10.0K DNP
R63 10.0K
C154 1.0 UF DNP
C33 0.1uF
VCORE
R190 200
Q2 MMBT3904LT1G
R186 10.0K DNP
C165 0.1uF
R192 10.0K DNP
U4
MP2365DN
C119 0.01UF
L9 4.7UH
R87 0
C16 10UF
C98 0.1uF
C118 100PF DNP
C126 5600PF
R173 20K
C109 0.1uF
D2 B330A
R180 44.2K
R176 10.0K
C163 0.1uF
C155 47uF
C32 330uF
R130 330
D5 YELLOW LED
3.3V Power LED

ICAP Classification: FCP: ___ FIUO: X PUBI: ___

Drawing Title:

**MPC8308 - NSG**

Page Title:

**Power Supply**

| Size | Document Number | Rev |
|---|---|---|
| C | SCH-27072 PDF: SPF-27072 | B |

Date: Thursday, June 30, 2011 Sheet 11 of 11