# UnityLC*X1

## MPMC8241

intelligence everywhere

*Digital DNA
from Motorola

| | | | | | | | |
|---|---|---|---|---|---|---|---|
| Date Changed: 1/30/2003 | Time: 3:00:47 pm | Engineer: Gary Milliorn | Drawing Number: M01UNITYLC | REV: X1 | Project: UnityLC | TITLE: Title Page | Page: 01 |

Motorola 6501 William Cannon Blvd. Austin, TX 78735

## Schematic Notes

| | |
|---|---|
| 1. | Unless otherwise specified:<br>All resistors are SMD0603, in ohms, 0.08W, +/-5%<br>All capacitors are SMD0603, in microfarads (uF), +/-20%.<br>All inductances are in microhenries (uH).<br>All ferrites are Z=50 ohms at 100 MHz.<br>All fuses are self-resetting polyswitch (PTC) devices.<br>Board impedance is 50-60 ohms. |
| 2. | Integrated circuits have default connections to power and ground unless explicitly shown otherwise. Global power connections are:<br>GND VCC_2.5V<br>VCC_3.3V VCORE<br>VCC_5V |
| 3. | Part numbers used are for reference only; compatible parts may be used; refer to the bill of materials. |
| 4. | Motorola and the Motorola logo are registered trademarks of Motorola. PowerPC is a trademark of IBM. Other trademarks are the respective property of their respective copyright holders. I am...I was. All rights reserved. |
| 5. | The sheet-to-sheet cross reference format is:<br>Sheet "-" VertZoneLetter HorizZoneNumber |
| 6. | Components with the label "no_stuff" are not installed by default. These are typically used for options or configurations and can be deleted from user-versions as required.<br>C123<br>33pF<br>No_stuff |
| 7. | All buses follow big-endian bit numbering order (bit 0 is the most-significant bit), except where industry standards apply (i.e. PCI). Little-endian numbering is noted at the source component. |

# UnityLC*


| Page | Contents |
|---|---|
| 01 | Cover Page |
| 02 | General Information |
| 03 | Block Diagram |
| 04 | Routing and Layout Information |
| 05 | Power Supply |
| 06 | System Configuration |
| 07 | MPC8241 System Interface; I2C |
| 08 | MPC8241 Memory Interface |
| 09 | SDRAM SODIMM |
| 10 | MPC8241 PCI Interface; Power |
| 11 | Dual Flash ROMs |
| 12 | UART; Standalone Support |
| 13 | Miscellany; LEDs; Mode Mux |
| 14 | PMC Connectors P1, P2 |
| 15 | Logic Analyzer Headers |


| REV | DATE | CHANGES |
|---|---|---|
| X1 | 01SEP06 | Original |




Motorola 6501 William Cannon Blvd. Austin, TX 78735

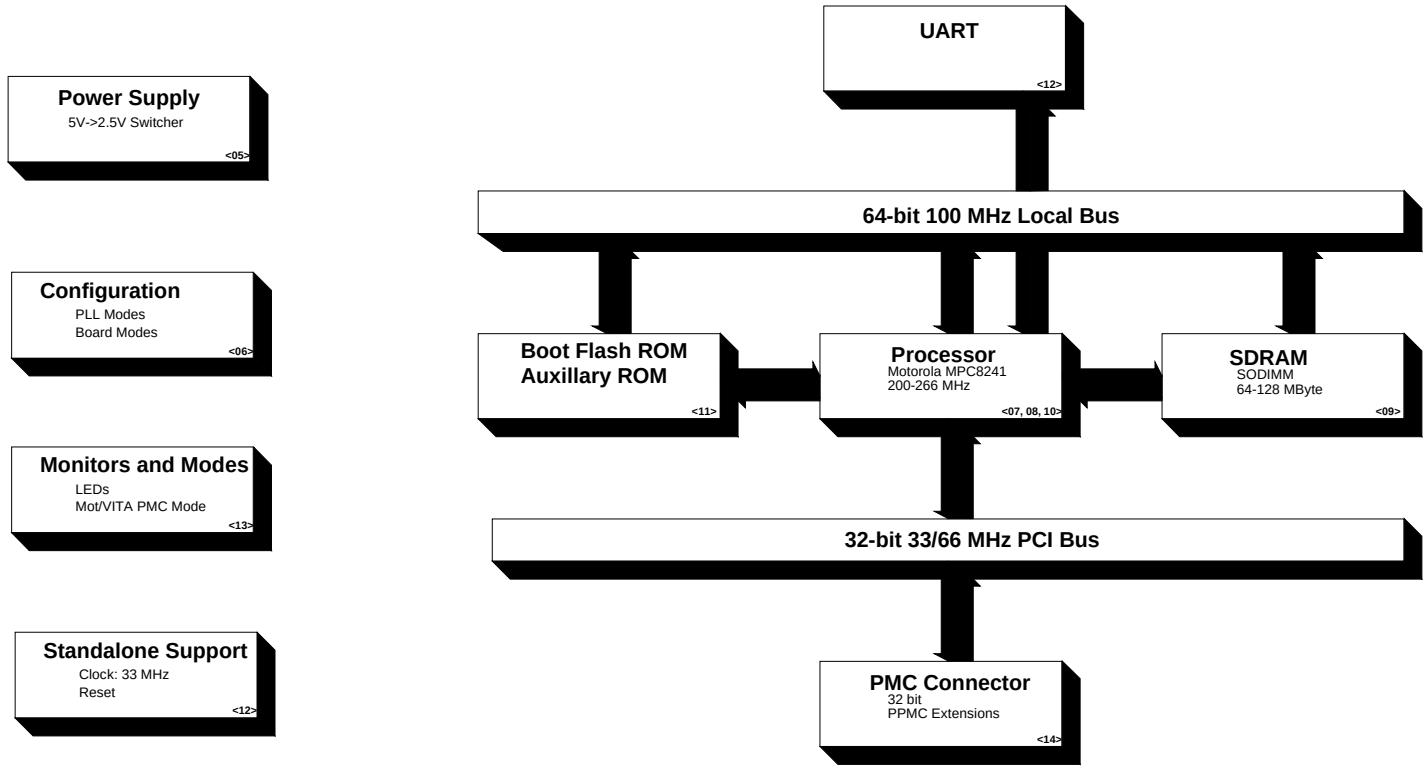


| Date Changed: 9/6/2001 | Time: 3:32:27 pm | Engineer: Gary Milliorn | Drawing Number: M01UNITYLC | REV: X1 | Project: UnityLC | TITLE: Block Diagram | Page: 03 |
|---|---|---|---|---|---|---|---|

Motorola 6501 William Cannon Blvd. Austin, TX 78735

## Layout/Routing Instructions

| | |
|---|---|
| 05 | Use split power plane to connect VCC_2.5 from power supply to CPU core.<br>Place 820 uF low-ESR capacitors near CPU.<br>Place VID pulldown resistors in order shown.<br>Use split power plane or very heavy traces for power path:<br>+5V => MOSFET Qx => Inductor Lx =><br>Low-Ohm Res. Rx => VCC_2.5 Plane<br>Keep trace from 68 uF low-ESR capacitors within 2 cm of high-side MOSFET (Q2).<br>Keep MOSFET gate drive lines < 2 cm.<br>Keep VCCA/VCCP attachment within 2 cm of input filter location.<br>Keep VCC_2.5 power flowing point-to-point through MOSFETs, inductor, resistor and output filter capacitors.<br>Use short traces throughout. |
| 06 | Place slide switches in vertical orientation and do not swap PLL config pins. |
| 07 | No special restrictions |
| 08 | Place series termination resistors very near source, < 1.5 cm.<br>Route terminated traces using equal trace lengths towards SDRAM array.<br>Route SDRAM_SYNC_OUT => SDRAM_SYNC_IN path to equal longest clock trace.<br>Route all control, address and data traces to equal lengths. |
| 09 | Place PLL filters on bottom of PCB beneath MPC8240<br>Use short heavy traces on PLL filter power.<br>Surround MPC8240 with bypass caps shown to provide additional ground-return paths; use two ground-attach vias.<br>Place bulk capacitance near BGA IVDD and +3.3V ground planes. |
| 10 | Place SODIMM socket within 3.5cm of MPC6xx (center-to-center). |
| 11 | No special instructions. |
| 12 | Place LEDs so they are visible on the top and legends are nearby. |
| 13 | Maximum trace length for PCI signals to MPC8240 is 1.5" per the PCI specification. |

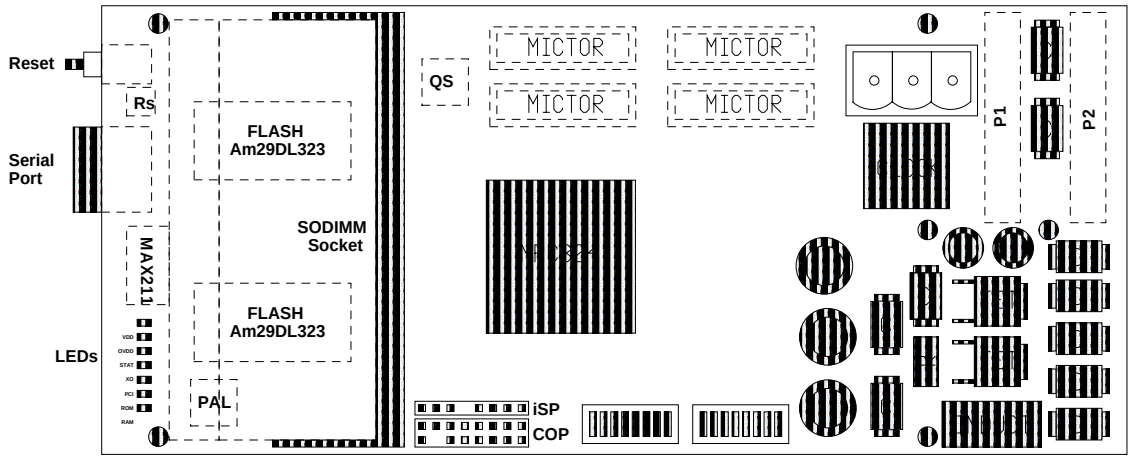


Motorola 6501 William Cannon Blvd. Austin, TX 78735

| | | | | | | | |
|---|---|---|---|---|---|---|---|
| Date Changed: 9/6/2001 | Time: 3:35:14 pm | Engineer: Gary Milliorn | Drawing Number: M01UNITYLC | REV: X1 | Project: UnityLC | TITLE: Placement and Routing Instructions | Page: 04 |

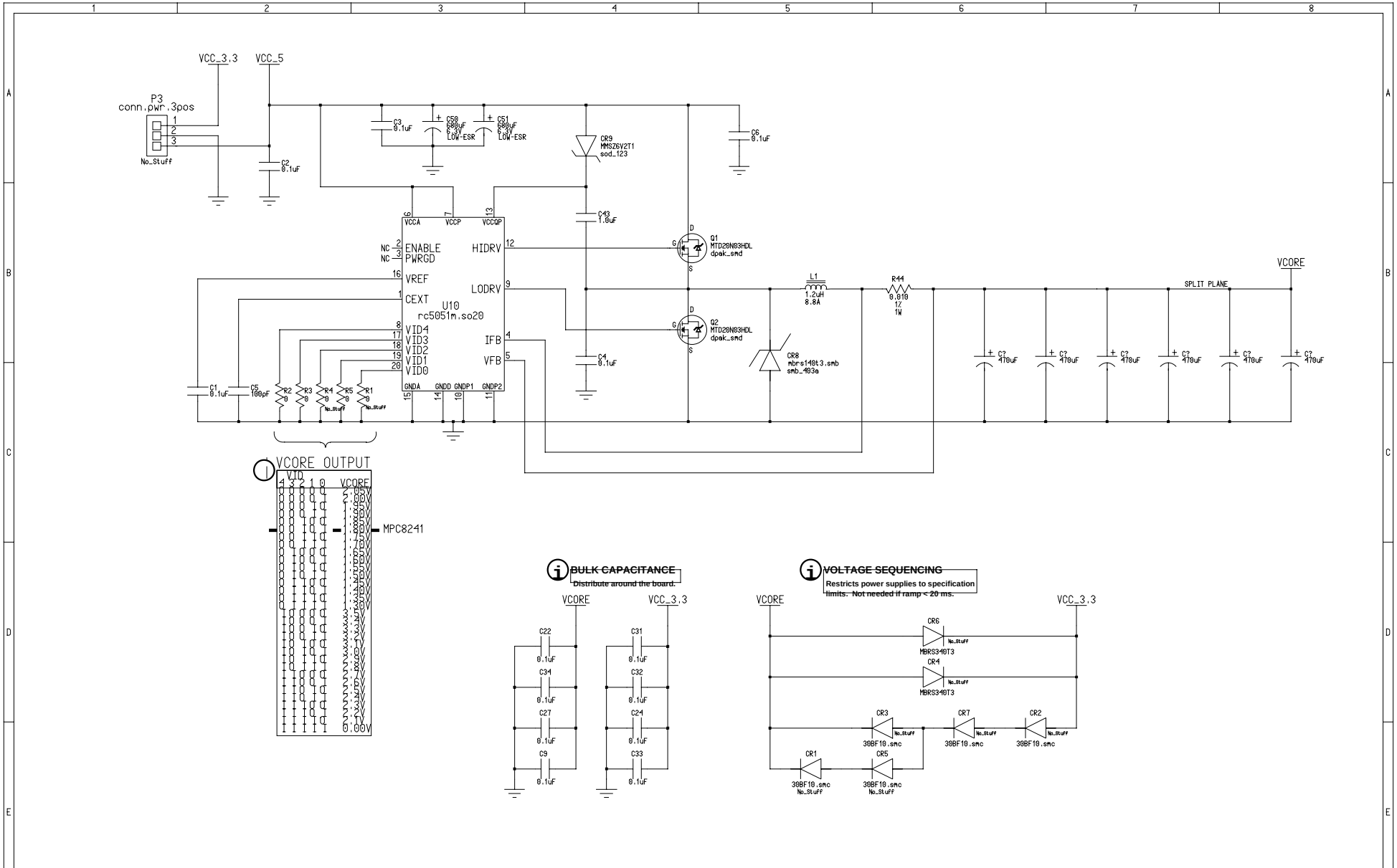


| Date Changed: 10/4/2001 | Time: 10:40:17 am | Engineer: Gary Milliorn | Drawing Number: M01UNITYLC | REV: X1 | Project: UnityLC | TITLE: MPC8241 Core Power Supply | Page: 05 |
|---|---|---|---|---|---|---|---|

Motorola 6501 William Cannon Blvd. Austin, TX 78735

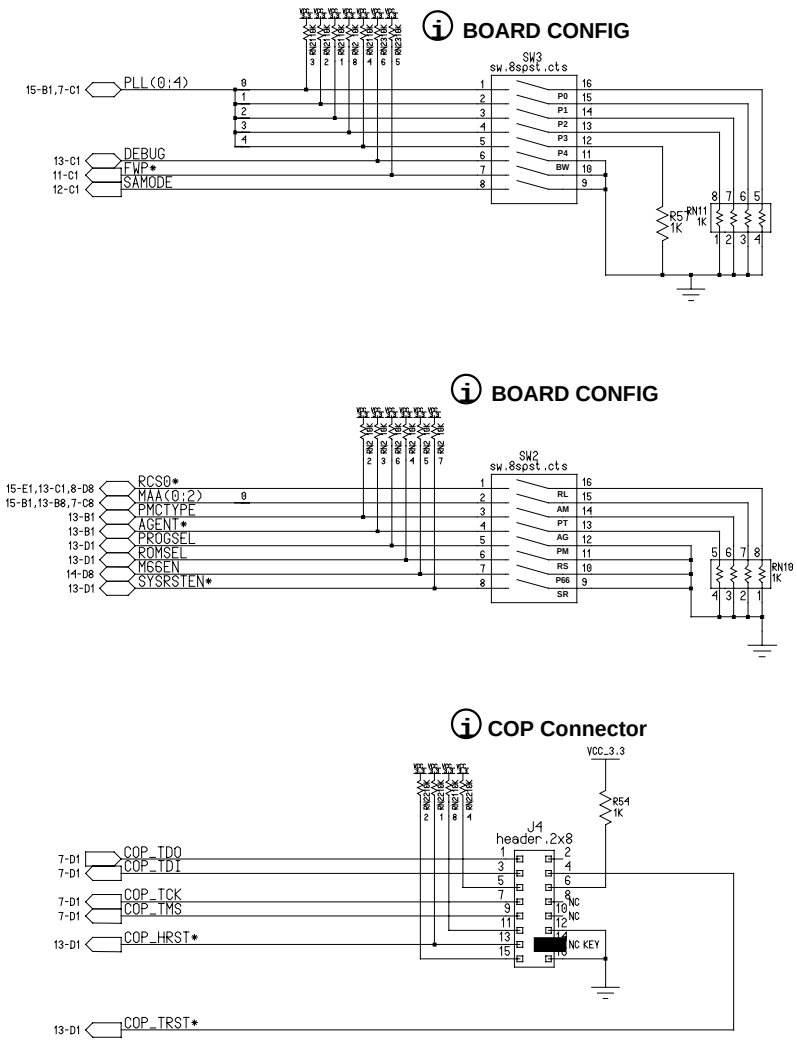


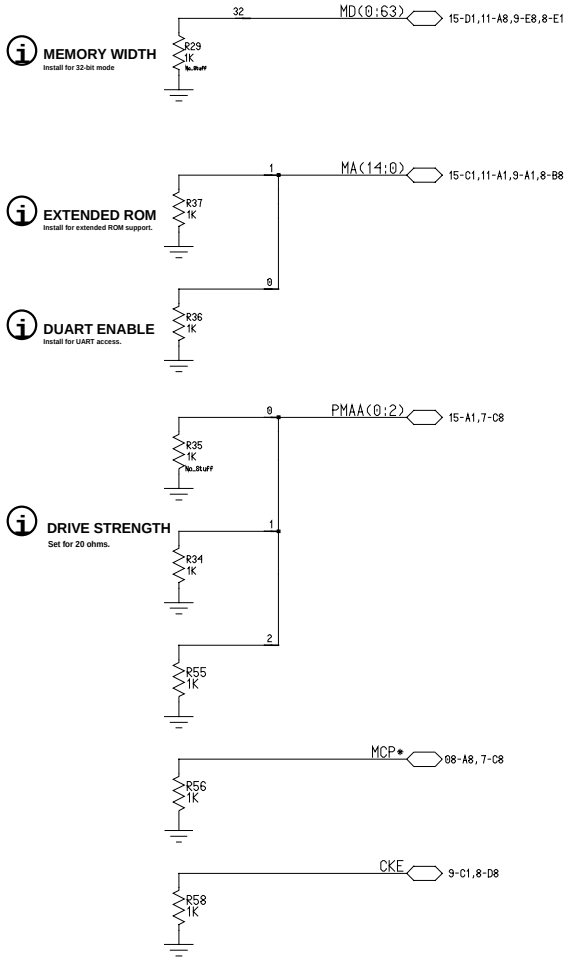


| Date Changed: 9/6/2001 | Time: 4:27:05 pm | Engineer: Gary Milliorn | Drawing Number: M01UNITYLC | REV: X1 | Project: UnityLC | TITLE: Configuration Options; COP Header | Page: 06 |
|---|---|---|---|---|---|---|---|

Motorola 6501 William Cannon Blvd. Austin, TX 78735

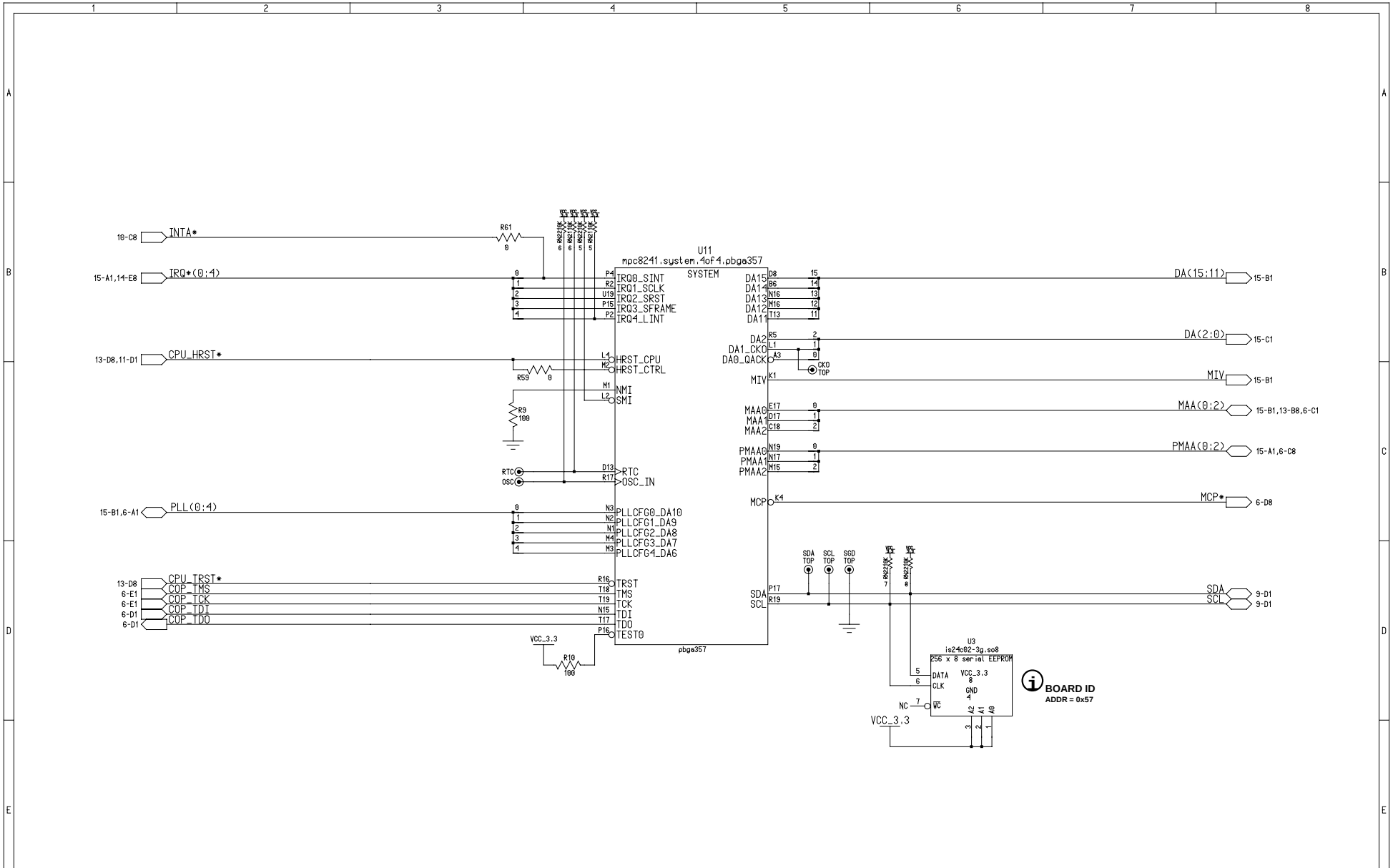


| Date Changed: 9/24/2001 | Time: 5:17:48 pm | Engineer: Gary Milliorn | Drawing Number: M00UNITYLC | REV: X1 | Project: UnityLC | TITLE: MPC8241: System Logic; Board ID EEPROM | Page: 07 |
|---|---|---|---|---|---|---|---|

Motorola 6501 William Cannon Blvd. Austin, TX 78735

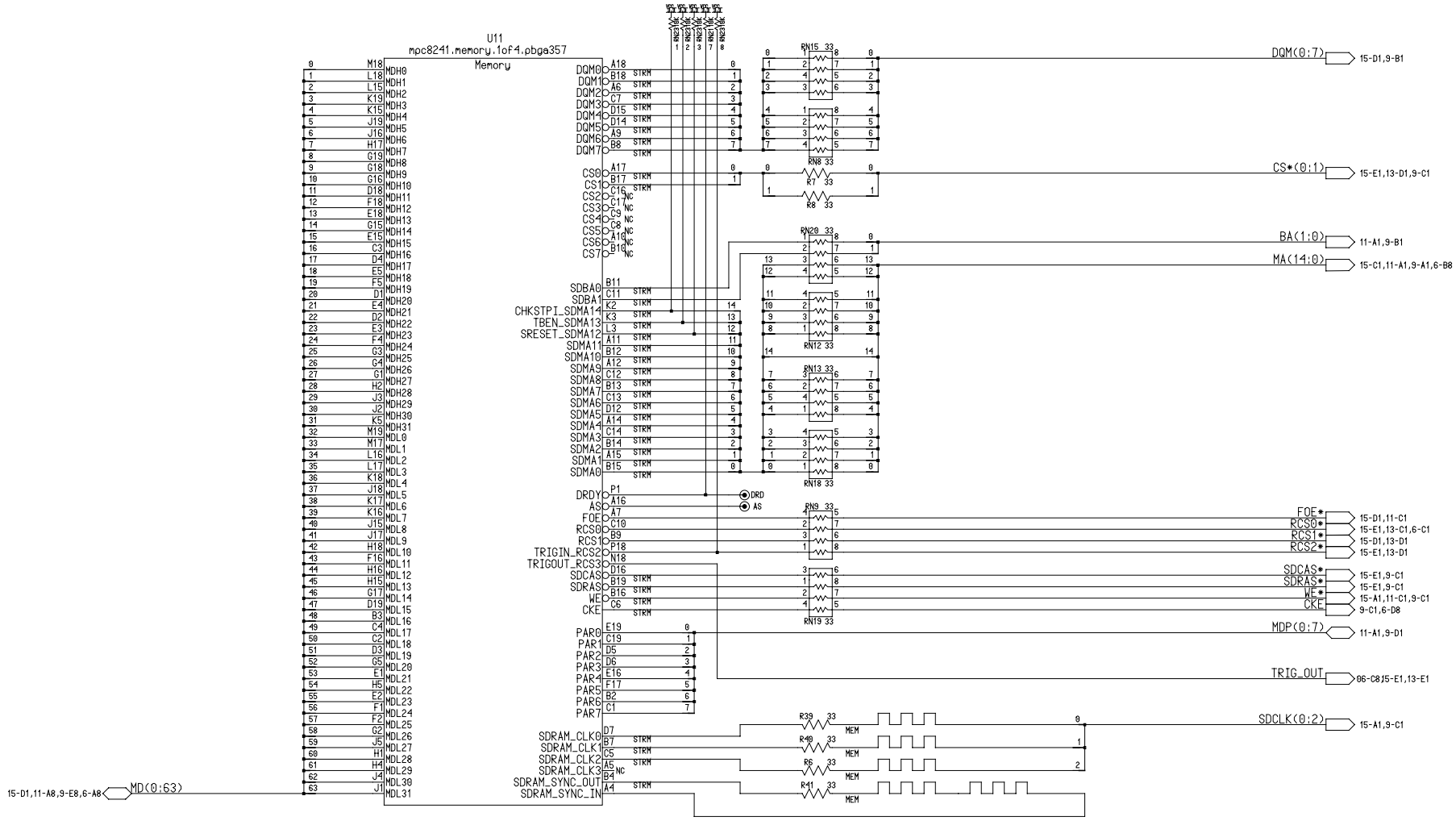


| Date Changed: 9/24/2001 | Time: 4:13:55 pm | Engineer: Gary Milliorn | Drawing Number: M00UNITYLC | REV: X1 | Project: UnityLC | TITLE: MPC8241: Memory Interface; SODIMM Module | Page: 08 |
|---|---|---|---|---|---|---|---|

Motorola 6501 William Cannon Blvd. Austin, TX 78735

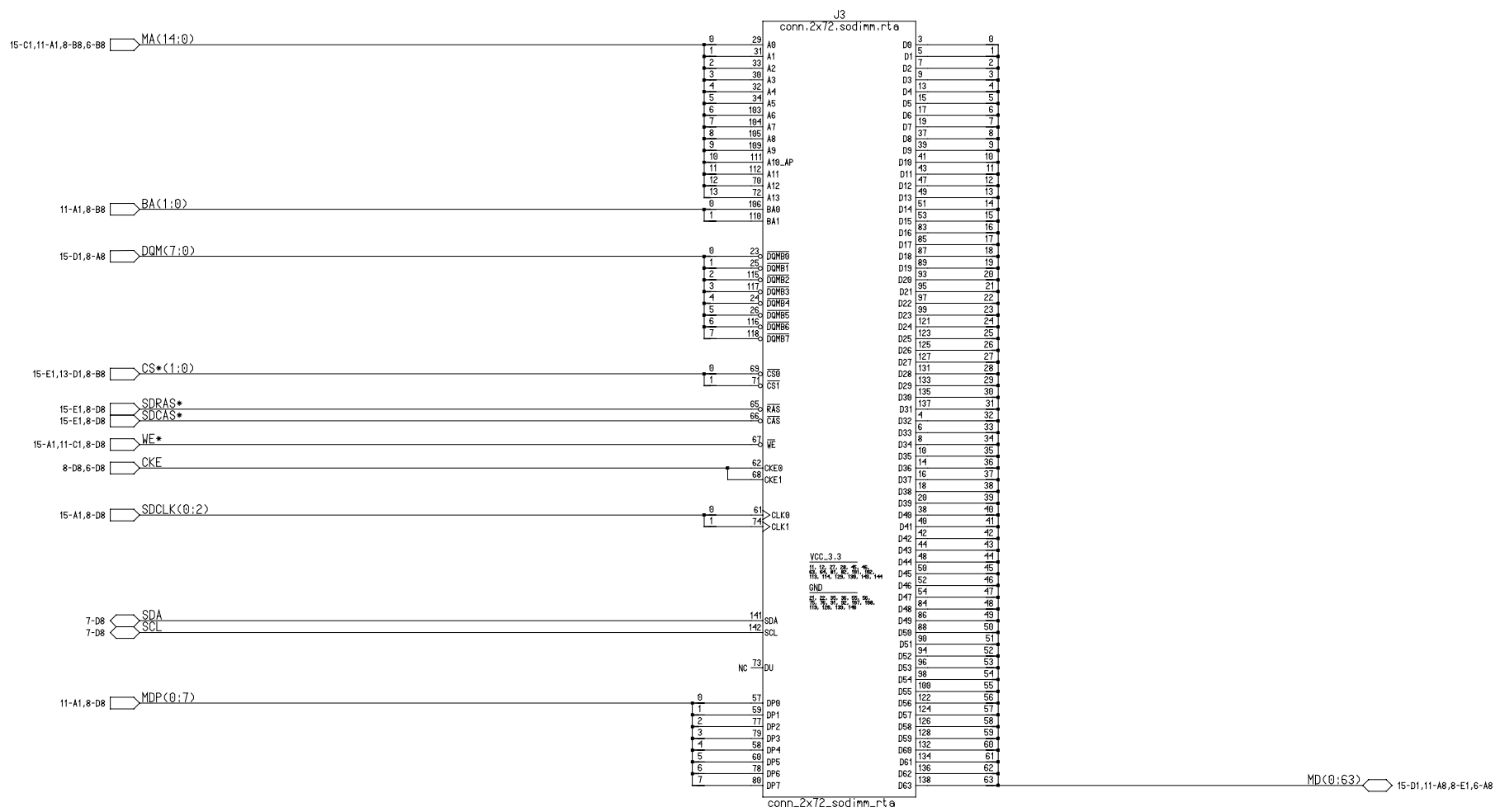


| Date Changed: 9/6/2001 | Time: 3:20:17 pm | Engineer: Gary Milliorn | Drawing Number: M01UNITYLC | REV: X1 | Project: UnityLC | TITLE: MPC8241: SDR-SDRAM SODIMM Module | Page: 08a |
|---|---|---|---|---|---|---|---|

Motorola 6501 William Cannon Blvd. Austin, TX 78735

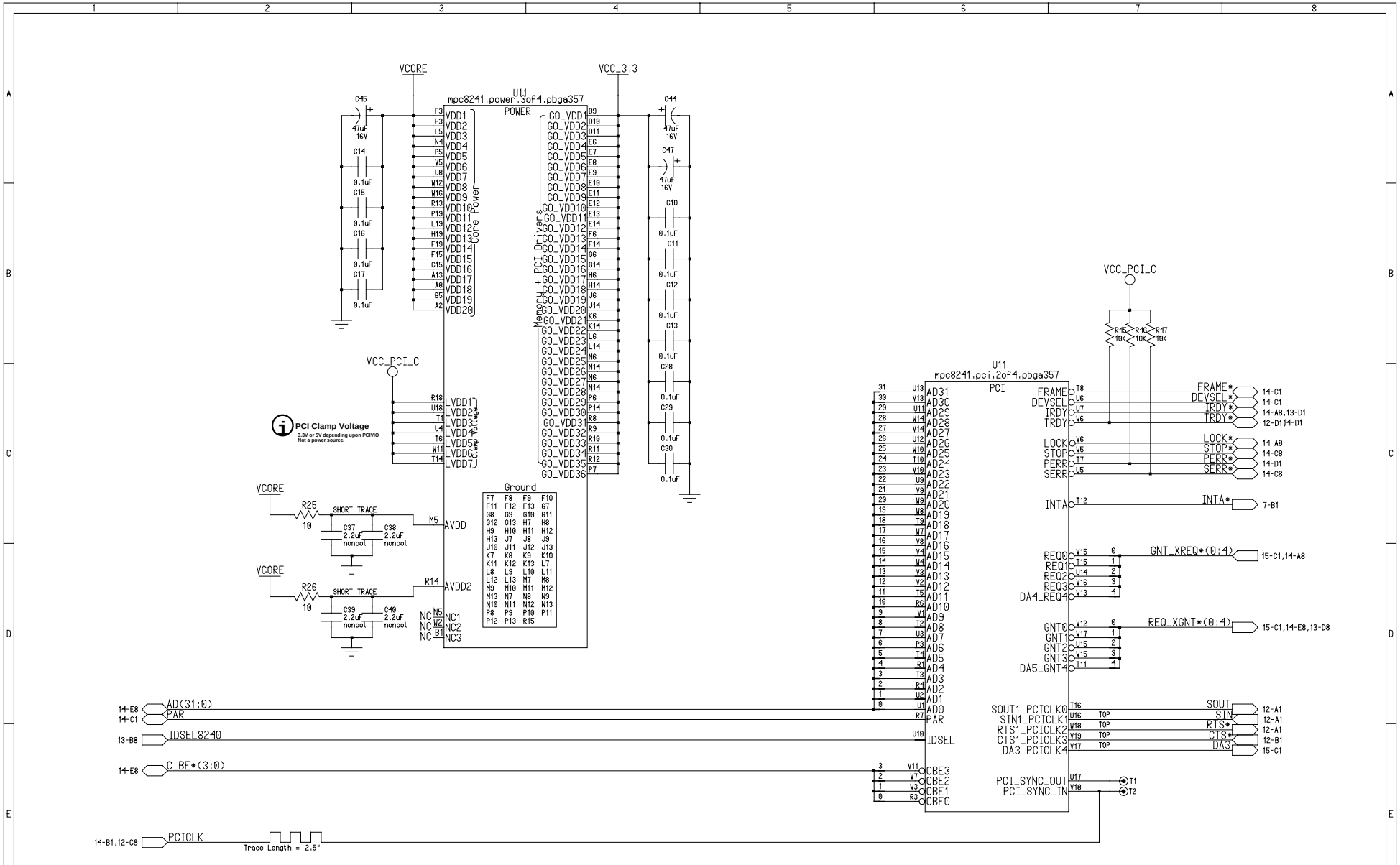


| Date Changed: 10/19/2001 | Time: 1:56:13 pm | Engineer: Gary Milliorn | Drawing Number: M01UNITYLC | REV: X1 | Project: UnityLC | TITLE: MPC8241: PCI Interface; Power | Page: 10 |
|---|---|---|---|---|---|---|---|

Motorola 6501 William Cannon Blvd. Austin, TX 78735

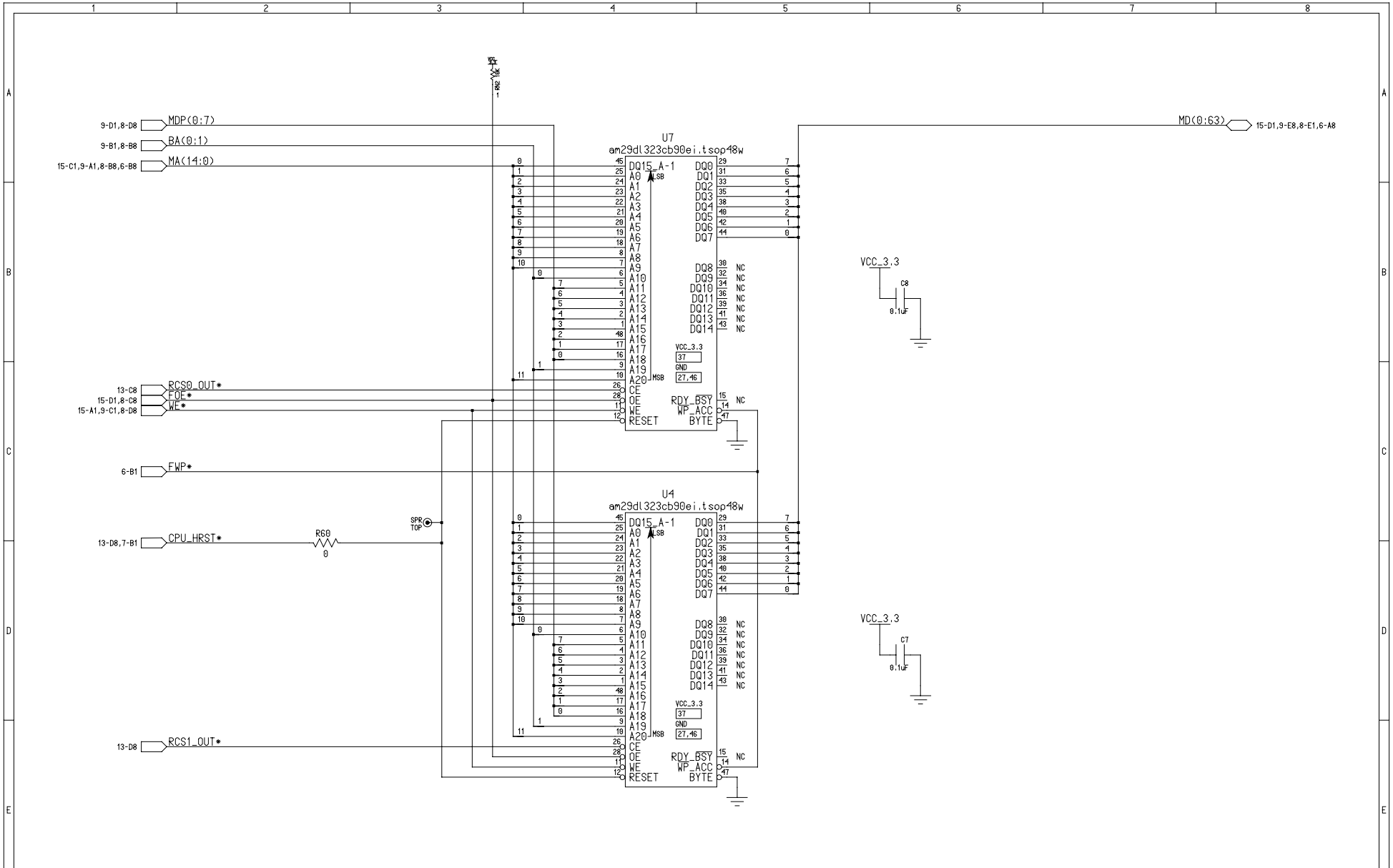


| Date Changed: 9/6/2001 | Time: 3:21:55 pm | Engineer: Gary Milliorn | Drawing Number: M01UNITYLC | REV: X1 | Project: UnityLC | TITLE: Local Flash: Boot and Auxillary | Page: 10 |
|---|---|---|---|---|---|---|---|

Motorola 6501 William Cannon Blvd. Austin, TX 78735

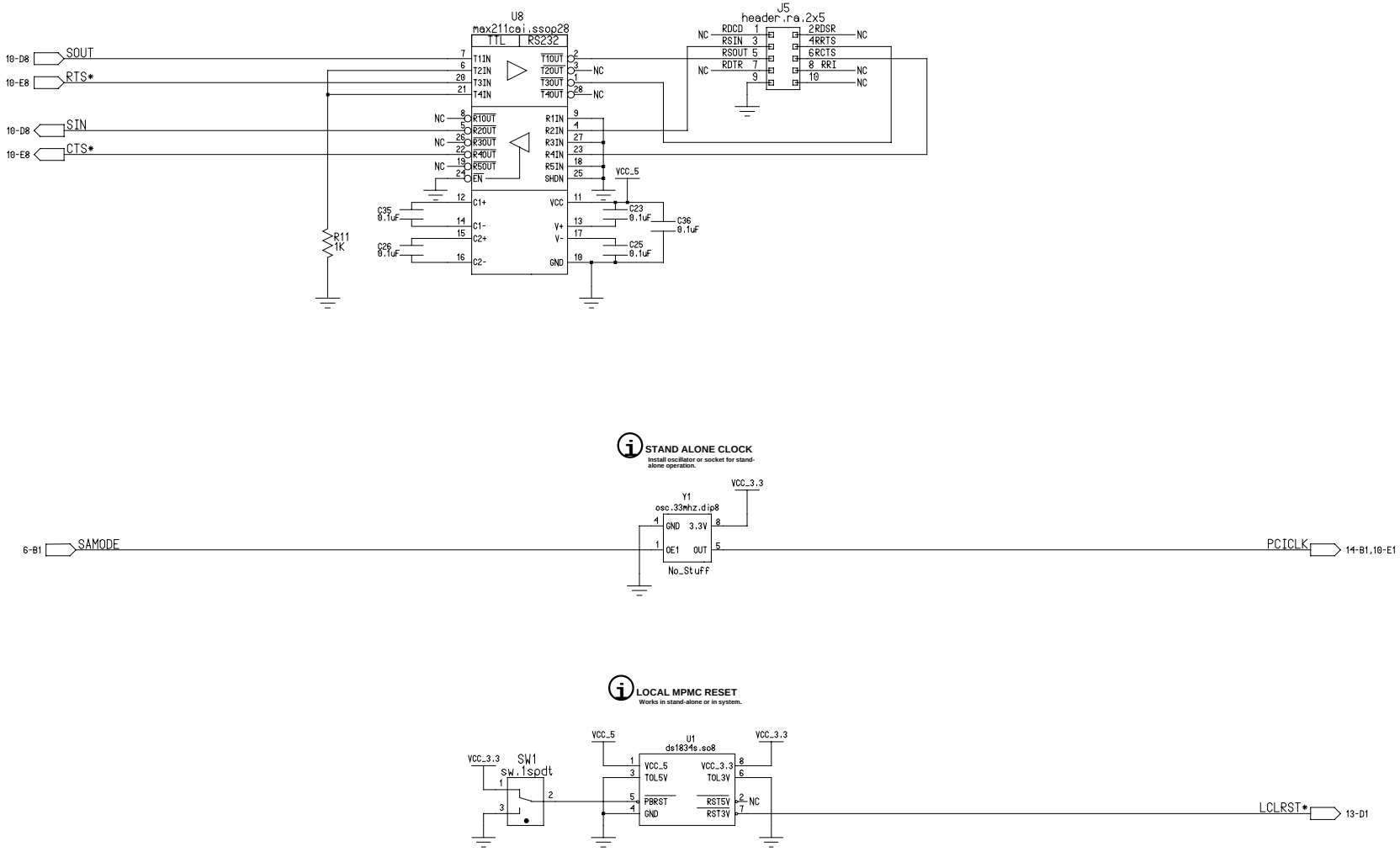


| Date Changed: 9/6/2001 | Time: 3:36:42 pm | Engineer: Gary Milliorn | Drawing Number: M01UNITYLC | REV: X1 | Project: UnityLC | TITLE: RS232 Driver; Standalone Support | Page: 11 |
|---|---|---|---|---|---|---|---|

Motorola 6501 William Cannon Blvd. Austin, TX 78735

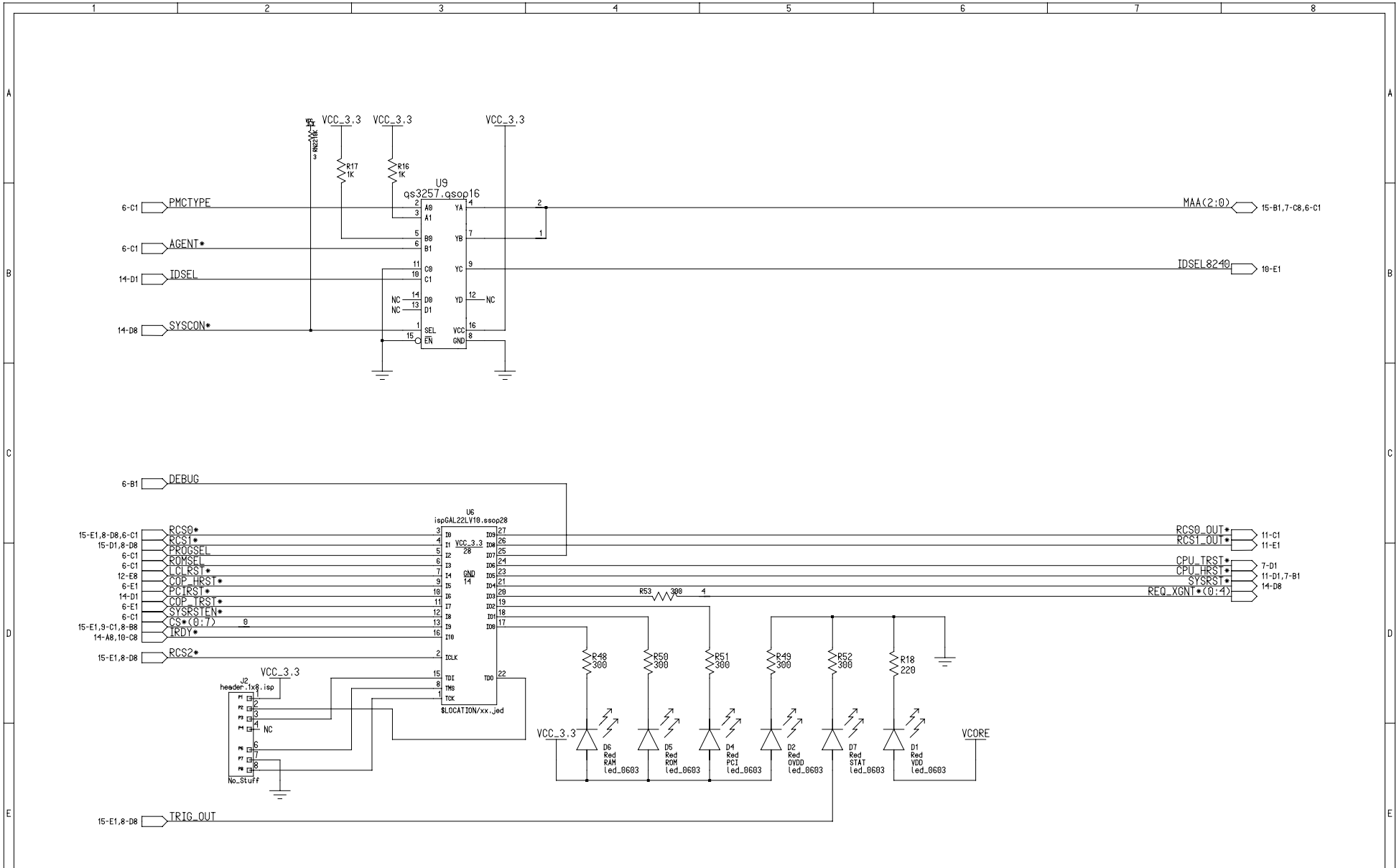


| Date Changed: 9/6/2001 | Time: 4:47:44 pm | Engineer: Gary Milliorn | Drawing Number: M01UNITYLC | REV: X1 | Project: UnityLC | TITLE: SYSCON Mode Select; Miscellany | Page: 12 |
|---|---|---|---|---|---|---|---|

Motorola 6501 William Cannon Blvd. Austin, TX 78735

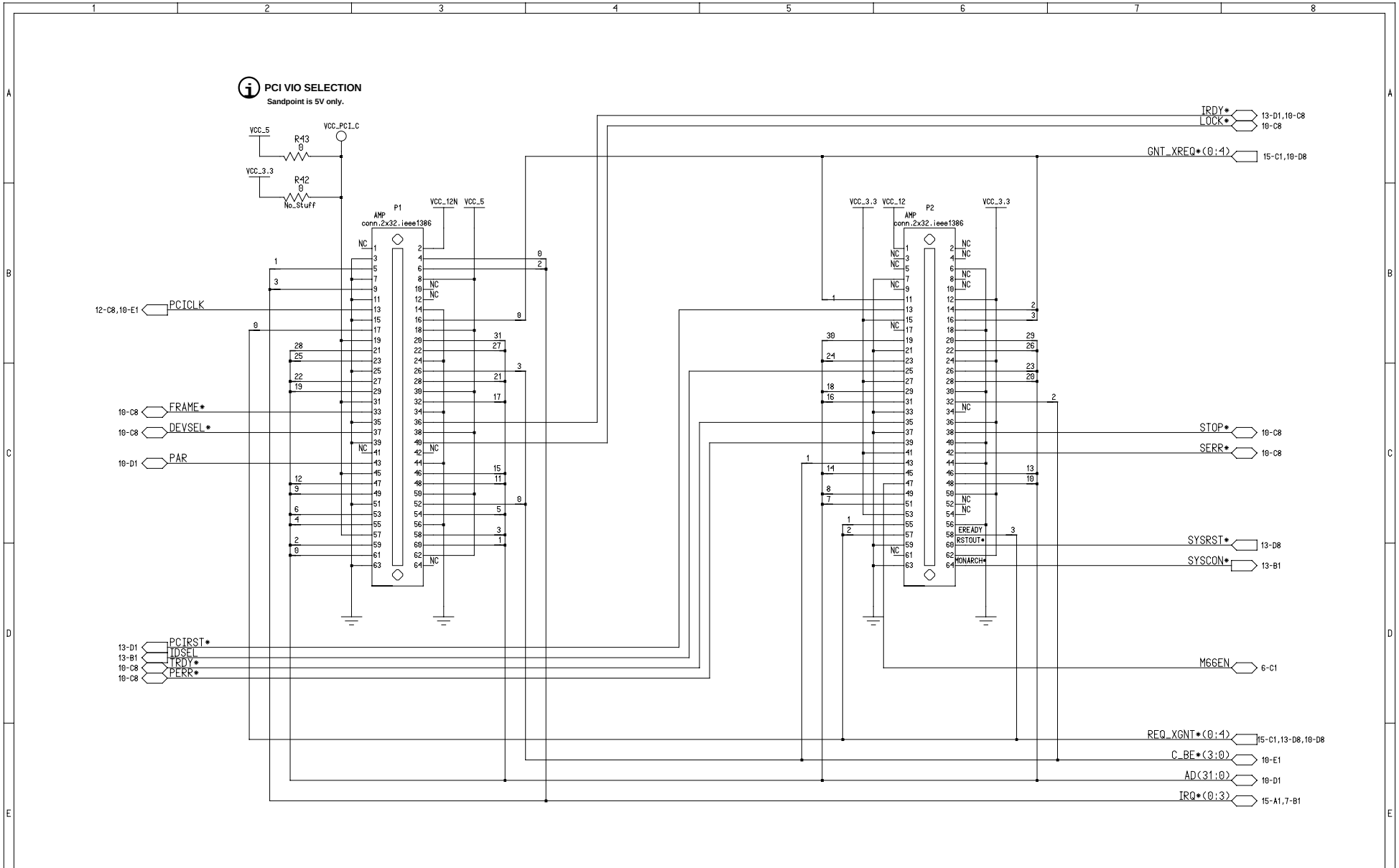


| Date Changed: 9/6/2001 | Time: 3:38:10 pm | Engineer: Gary Milliorn | Drawing Number: M01UNITYLC | REV: X1 | Project: UnityLC | TITLE: PMC Connectors #1 and #2 | Page: 13 |
|---|---|---|---|---|---|---|---|

Motorola 6501 William Cannon Blvd. Austin, TX 78735

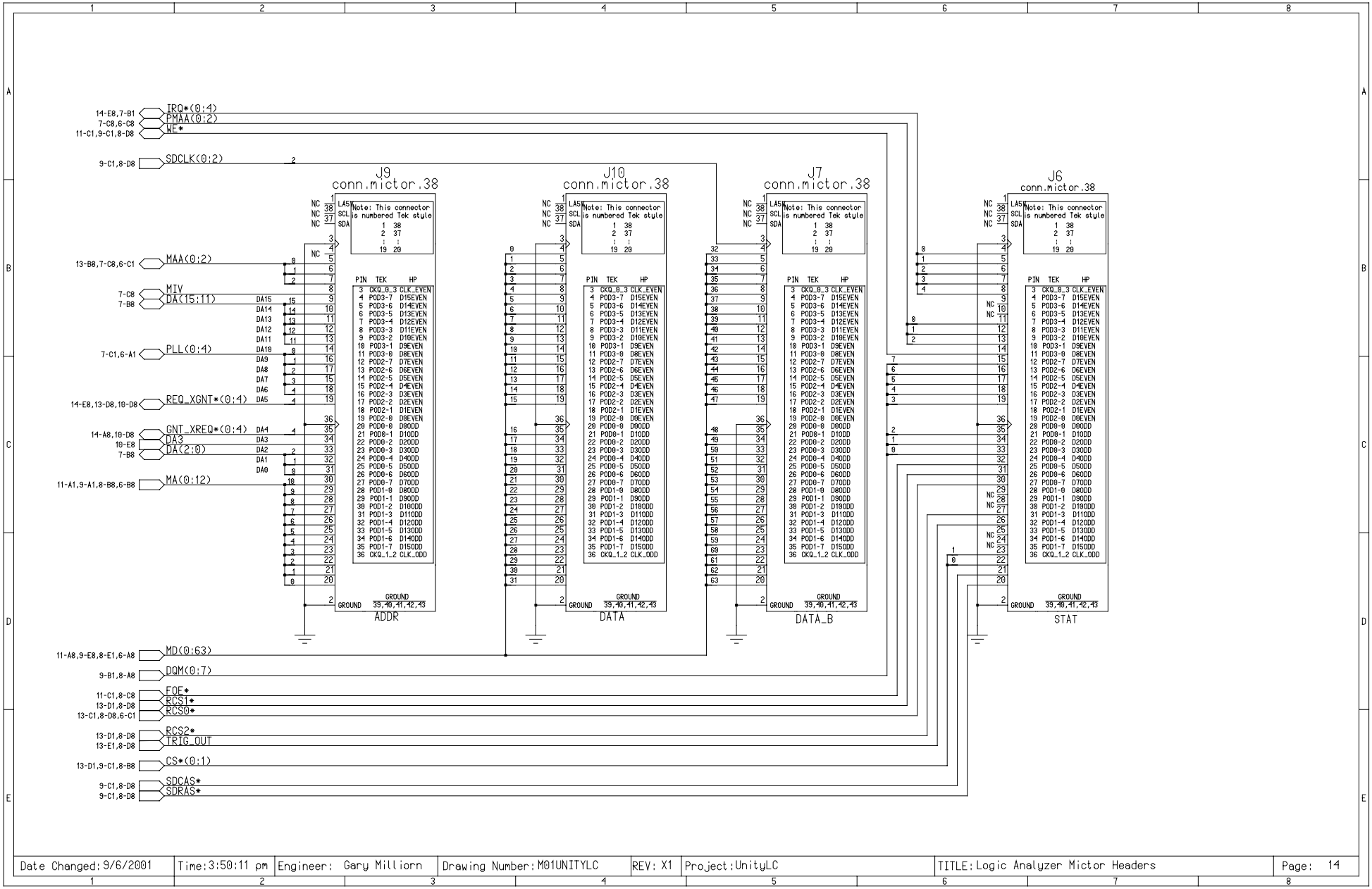


| Date Changed: 9/6/2001 | Time: 3:50:11 pm | Engineer: Gary Milliorn | Drawing Number: M01UNITYLC | REV: X1 | Project: UnityLC | TITLE: Logic Analyzer Mictor Headers | Page: 14 |
|---|---|---|---|---|---|---|---|

Motorola 6501 William Cannon Blvd. Austin, TX 78735