E-Lock

E-LOCK

Last Updated: Apr 23, 2024

NXP's wide portfolio offers several options for smart lock solutions, can be accessed via NFC contact or contactless technology. Our wireless MCUs are the perfect choice to use Bluetooth® Low Energy to communicate with a user’s smartphone to add an additional level of security in your design. allows Interaction with smart locks can range from something as simple as LEDs to give the user an indication of lock status, LCD panels with graphics and touch screen control, NXP provides a variety of connectivity options like low-power NFC, Bluetooth Low Energy or UWB. We also have analog components to complete the design of the smart lock.

E-Lock KL16Z Block Diagram

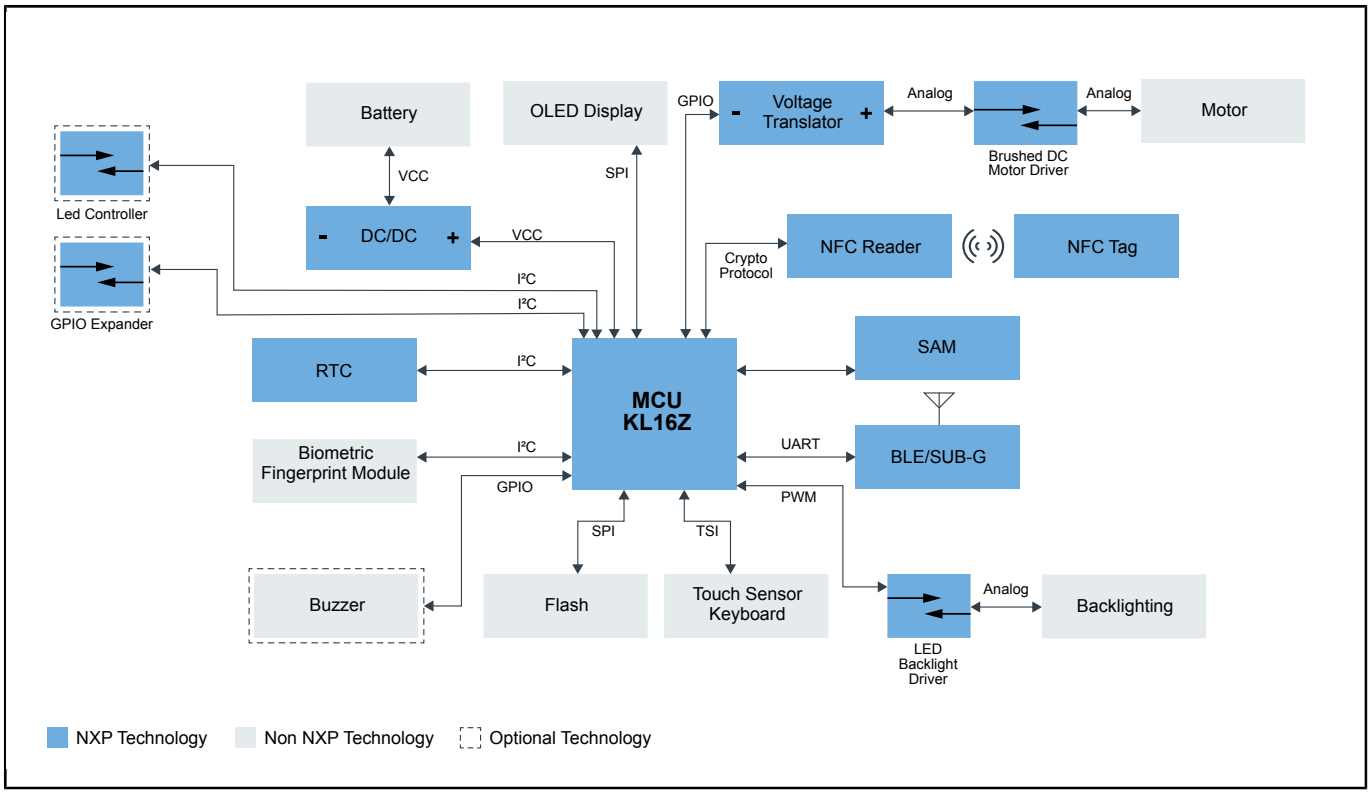

E-Lock PN7462 Block Diagram

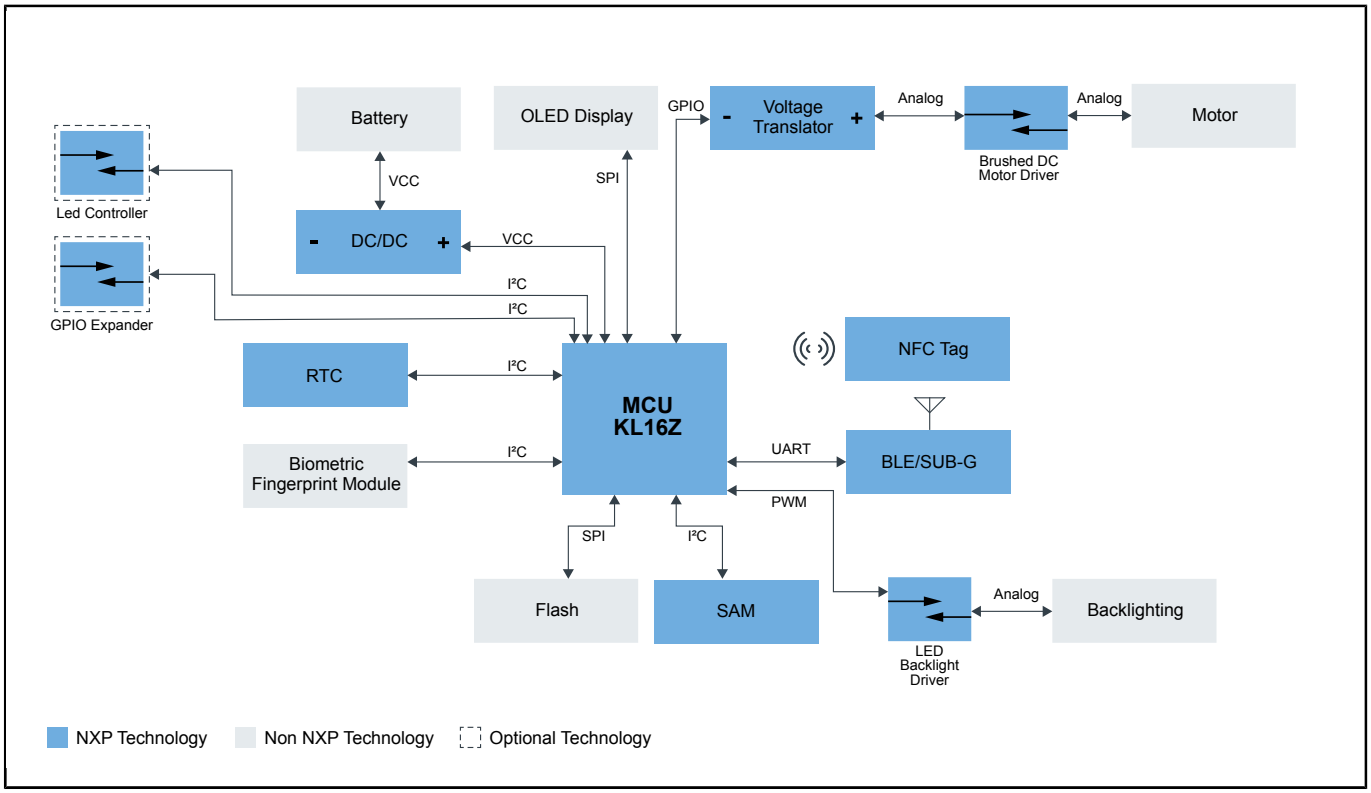

View additional information for E-Lock.

Note: The information on this document is subject to change without notice.

www.nxp.com
NXP and the NXP logo are trademarks of NXP B.V. All other product or service names are the property of their respective owners. The related technology may be protected by any or all of patents, copyrights, designs and trade secrets. All rights reserved. © 2024 NXP B.V.