2-Bit LVTTL-to-GTL Transceiver

GTL2012DP

Last Updated: Mar 15, 2024

The GTL2012 is a 2-bit translating transceiver designed for 3.3 V system interface with a GTL-/GTL/GTL+ bus.

The direction pin (DIR) allows the part to function as either a GTL-to-LVTTL sampling receiver or as an LVTTL-to-GTL interface.

The GTL2012 LVTTL inputs (only) are tolerant up to 5.5 V allowing direct access to TTL or 5 V CMOS inputs.

GTL2012 Block Diagram Block Diagram

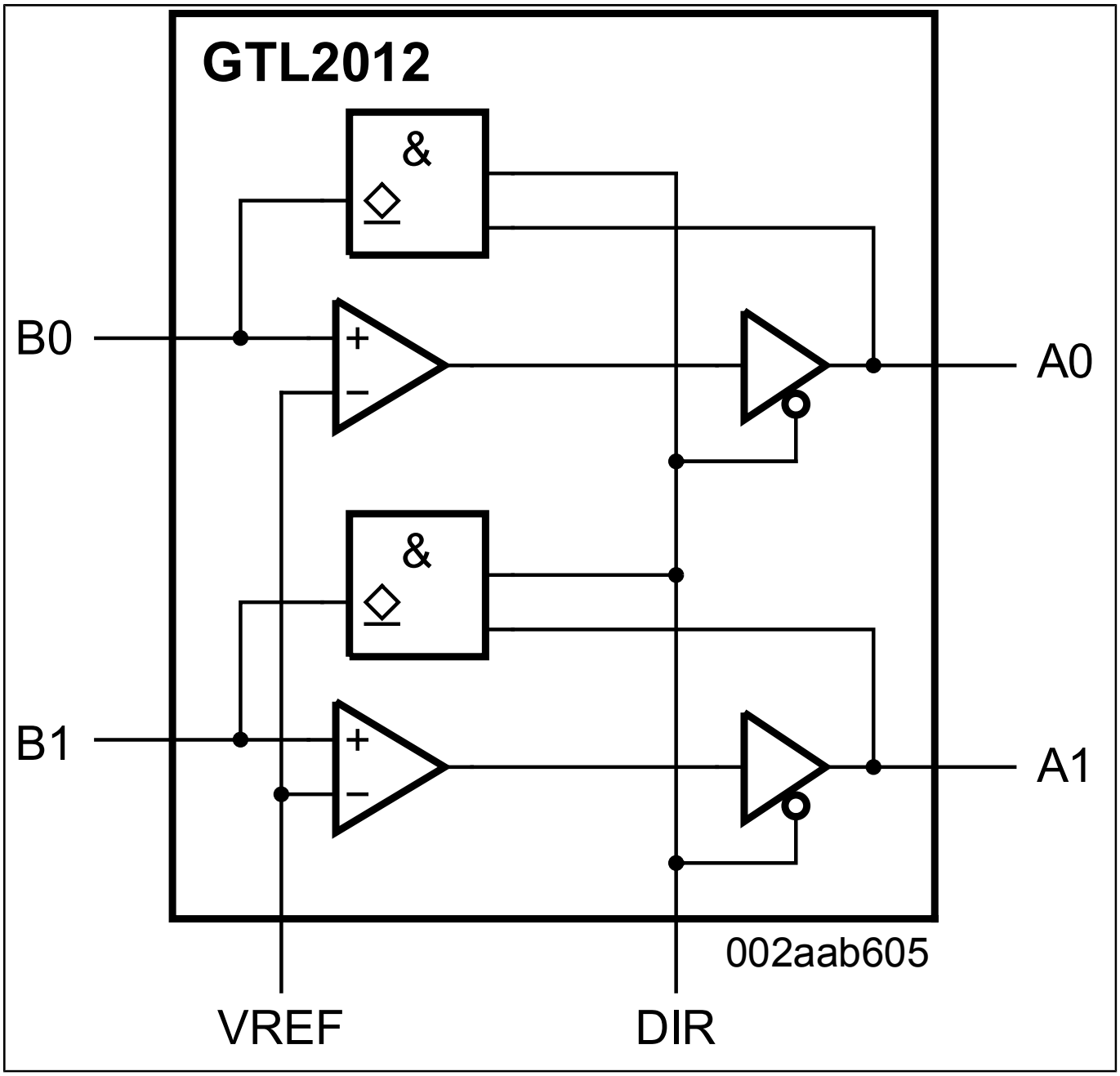

View additional information for 2-Bit LVTTL-to-GTL Transceiver.

Note: The information on this document is subject to change without notice.

www.nxp.com
NXP and the NXP logo are trademarks of NXP B.V. All other product or service names are the property of their respective owners. The related technology may be protected by any or all of patents, copyrights, designs and trade secrets. All rights reserved. © 2024 NXP B.V.