# IW610 Wi-Fi 6 M.2 Module with Bluetooth LE and 802.15.4

## IW610G-M2 NEW

Last Updated: Oct 26, 2026

The IW610G-M2 is an M.2 card based on the IW610 Wi-Fi 6, Bluetooth Low Energy (LE) and 802.15.4 tri-radio solution, designed to bring wireless connectivity to the MCX N947 and i.MX 91 evaluation kits.

The module can be stacked on the FRDM-MCXN947 using a compatible FRDM adapter board for MCX, unlocking wireless connectivity for MCX N947-based prototyping. It can also be used directly with the i.MX 91 evaluation kit (EVK) to support Wi-Fi 6, Bluetooth LE and 802.15.4 connectivity.

## IW610 Wi-Fi 6 M.2 Block Diagram

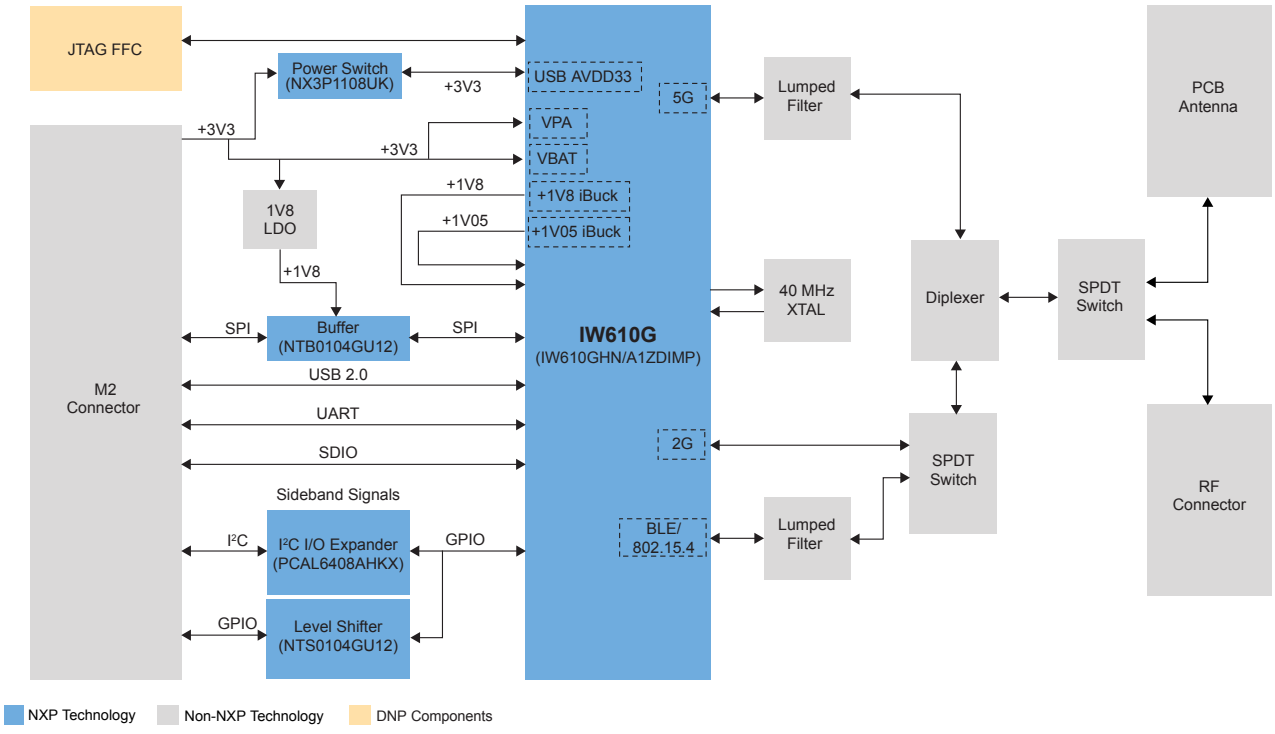


View additional information for IW610 Wi-Fi 6 M.2 Module with Bluetooth LE and 802.15.4.

**Note:** The information on this document is subject to change without notice.

**www.nxp.com**

NXP and the NXP logo are trademarks of NXP B.V. All other product or service names are the property of their respective owners. The related technology may be protected by any or all of patents, copyrights, designs and trade secrets. All rights reserved. © 2026 NXP B.V.