16/32-bit Arm® microcontroller; hardware floating-point coprocessor, USB On-The-Go, and SDRAM memory interface

LPC3180FEL320

Not Recommended for New Designs

This page contains information on a product that is not recommended for new designs.

Last Updated: Apr 8, 2022

The LPC3180 is an ARM9-based microcontroller for embedded applications requiring high performance combined with low power dissipation. It achieves these objectives through the combination of NXP®'s state-of-the-art 90 nanometer technology with an ARM926EJ-S CPU core with a Vector Floating Point (VFP) coprocessor and a large array of standard peripherals including USB On-The-Go.

The microcontroller can operate at over 200 MHz CPU frequency (about 220 MIPS per Arm Inc.). The ARM926EJ-S CPU incorporates a 5-stage pipeline and has a Harvard architecture with separate 32 kB instruction and data caches, a demand paged MMU, DSP instruction extensions with a single cycle MAC, and Jazelle Java bytecode execution hardware. A block diagram of the microcontroller is shown .

Power optimization in this microcontroller is done through process and technology development (Intrinsic Power), and architectural means (Managed Power).

The LPC3180 also incorporates an SDRAM interface, NAND flash interfaces, USB 2.0 full-speed interface, seven UARTs, two I²C-bus interfaces, two SPI ports, a Secure Digital (SD) interface, and a 10-bit ADC in addition to many other features.

Block diagram: LPC3180FEL320 Block Diagram

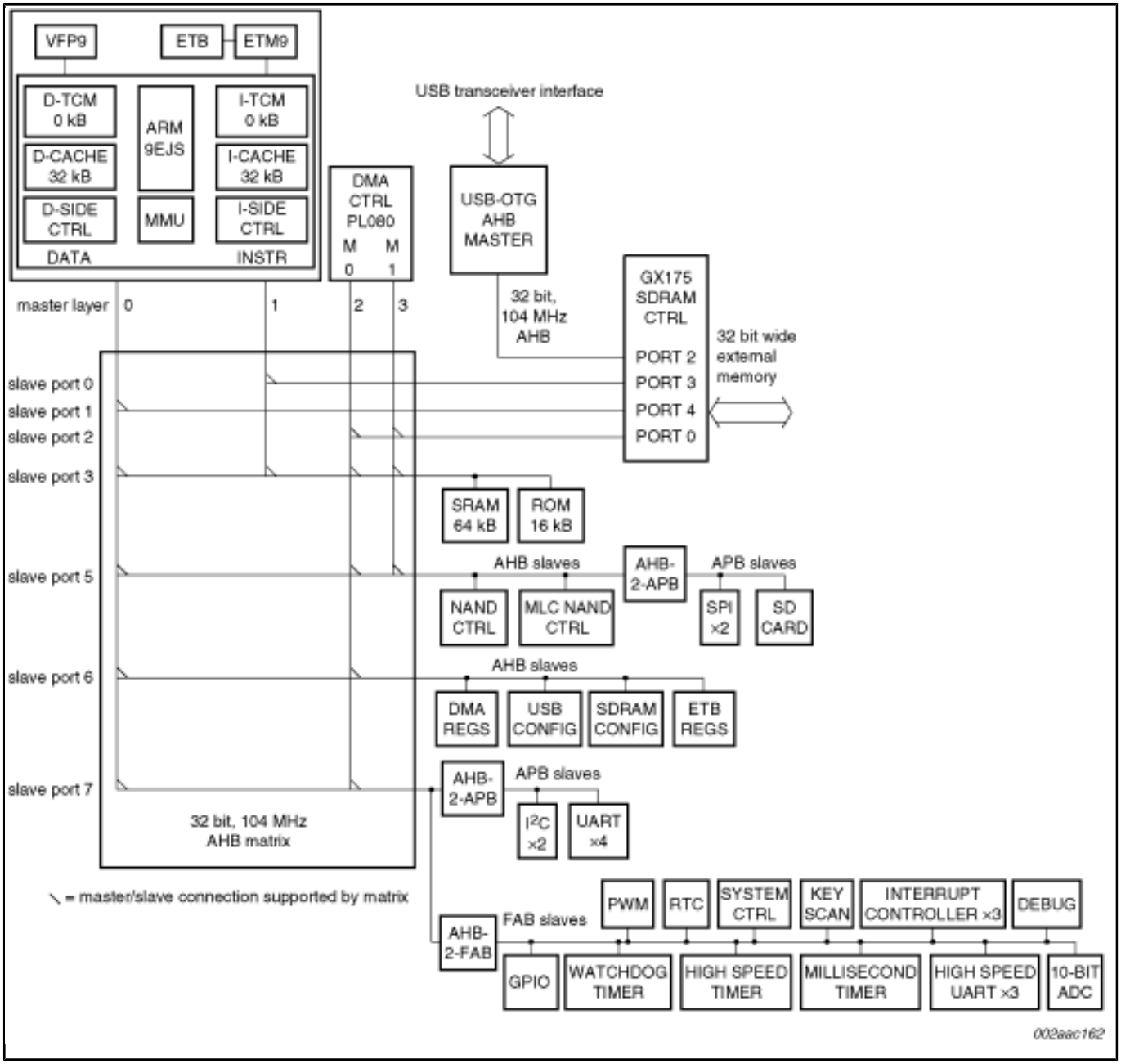

View additional information for 16/32-bit Arm® microcontroller; hardware floating-point coprocessor, USB On-The-Go, and SDRAM memory interface.

Note: The information on this document is subject to change without notice.

NXP and the NXP logo are trademarks of NXP B.V. All other product or service names are the property of their respective owners. The related technology may be protected by any or all of patents, copyrights, designs and trade secrets. All rights reserved. © 2024 NXP B.V.