MC34932/S H-Bridge, Brushed DC Motor Driver, 5-36 V, 5 A, 11 kHz/20 kHz

MC34932

Last Updated: Jul 20, 2023

The NXP® MC34932 consists of two independent, monolithic, thermally efficient 36 V/5 A H-Bridge DC motor drivers in the same package.

- Features real-time load current monitoring and automatic thermal back-off ensuring high availability operation in demanding high-current, high-temperature industrial applications
- Designed primarily for DC brushed and DC servo motor driver applications within the current and voltage limits stated in this specification
- Powered by SMARTMOS® technology
- Processor Expert® component for medium voltage H-Bridge products enables rapid embedded application development.

29400_MC34932_BD Block Diagram

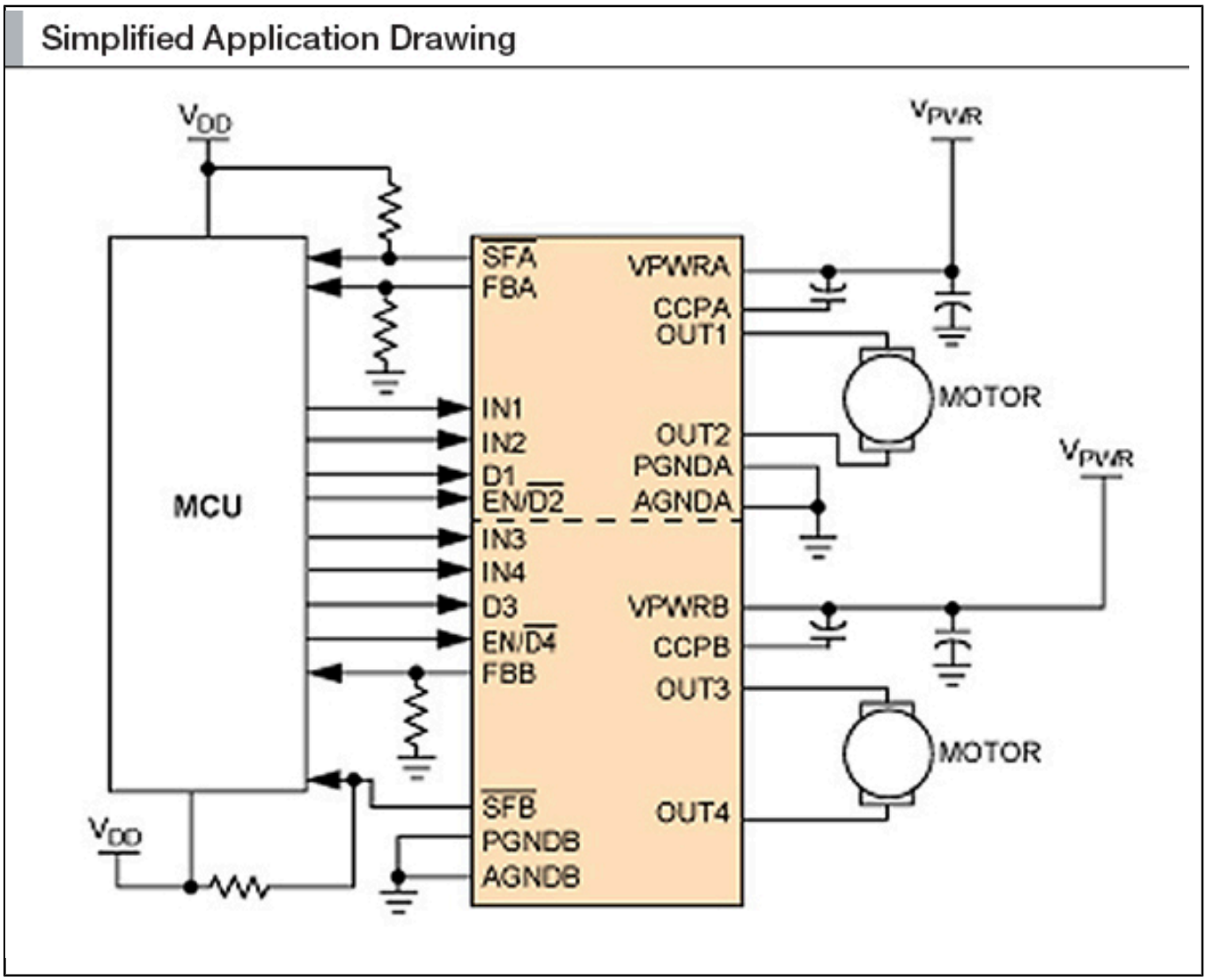

View additional information for MC34932/S H-Bridge, Brushed DC Motor Driver, 5-36 V, 5 A, 11 kHz/20 kHz.

Note: The information on this document is subject to change without notice.

www.nxp.com
NXP and the NXP logo are trademarks of NXP B.V. All other product or service names are the property of their respective owners. The related technology may be protected by any or all of patents, copyrights, designs and trade secrets. All rights reserved. © 2024 NXP B.V.