MPC5606B 3-phase BLDC Development Kit

MTRCKTSBN5606B

Last Updated: Sep 18, 2023

The MTRCKTSBN5606B motor control development kit is ideal for sensorless applications requiring one BLDC motor, like HVAC or electric pumps.

- Designed to enable rapid prototyping and evaluation of motor control applications without the need to wait for the final hardware design
- Includes a 32-bit NXP® MPC5606B based controller board and the 3-phase, low-voltage power stage board
- The application software provides a complete reference implementation of the BLDC motor control application and takes advantage of the Automotive Math and Motor Control Library Set

3-phase Sensorless BLDC Development Kit with NXP MPC5606B Block Diagram

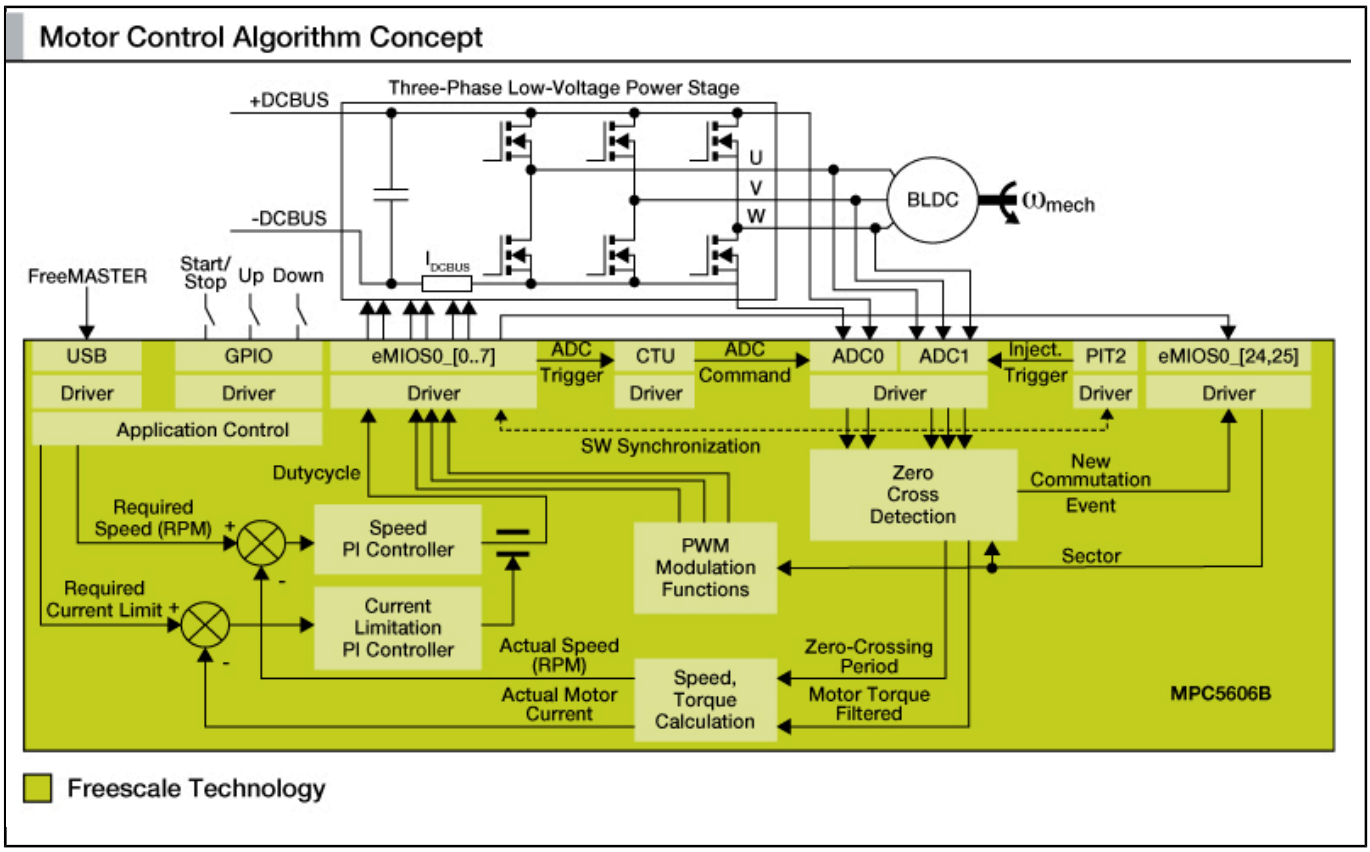

View additional information for MPC5606B 3-phase BLDC Development Kit.

Note: The information on this document is subject to change without notice.

www.nxp.com
NXP and the NXP logo are trademarks of NXP B.V. All other product or service names are the property of their respective owners. The related technology may be protected by any or all of patents, copyrights, designs and trade secrets. All rights reserved. © 2024 NXP B.V.