16-Bit I²C-Bus and SMBus I/O Port with Interrupt

PCA9555

Last Updated: Sep 6, 2022

The PCA9555 is a 24-pin CMOS device that provides 16 bits of General Purpose parallel Input/Output (GPIO) expansion for I²C-bus/SMBus applications and was developed to enhance the NXP Semiconductors family of I²C-bus I/O expanders. The improvements include higher drive capability, 5 V I/O tolerance, lower supply current, individual I/O configuration, and smaller packaging. I/O expanders provide a simple solution when additional I/O is needed for ACPI power switches, sensors, push buttons, LEDs, fans, etc.

The PCA9555 consists of two 8-bit Configuration (Input or Output selection); Input, Output and Polarity Inversion (active HIGH or active LOW operation) registers. The system controller can enable the I/Os as either inputs or outputs by writing to the I/O configuration bits. The data for each Input or Output is kept in the corresponding Input or Output register. The polarity of the read register can be inverted with the Polarity Inversion register. All registers can be read by the system controller. Although pin-to-pin and I²C-bus address compatible with the PCF8575, software changes are required due to the enhancements, and are discussed in Application Note AN469.

The PCA9555 open-drain interrupt output is activated when any input state differs from its corresponding input port register state and is used to indicate to the system controller that an input state has changed. The power-on reset sets the registers to their default values and initializes the device state machine.

Three hardware pins (A0, A1, A2) vary the fixed I²C-bus address and allow up to eight devices to share the same I²C-bus/SMBus. The fixed I²C-bus address of the PCA9555 is the same as the PCA9554, allowing up to eight of these devices in any combination to share the same I²C-bus/SMBus.

PCA9555 Block Diagram Block Diagram

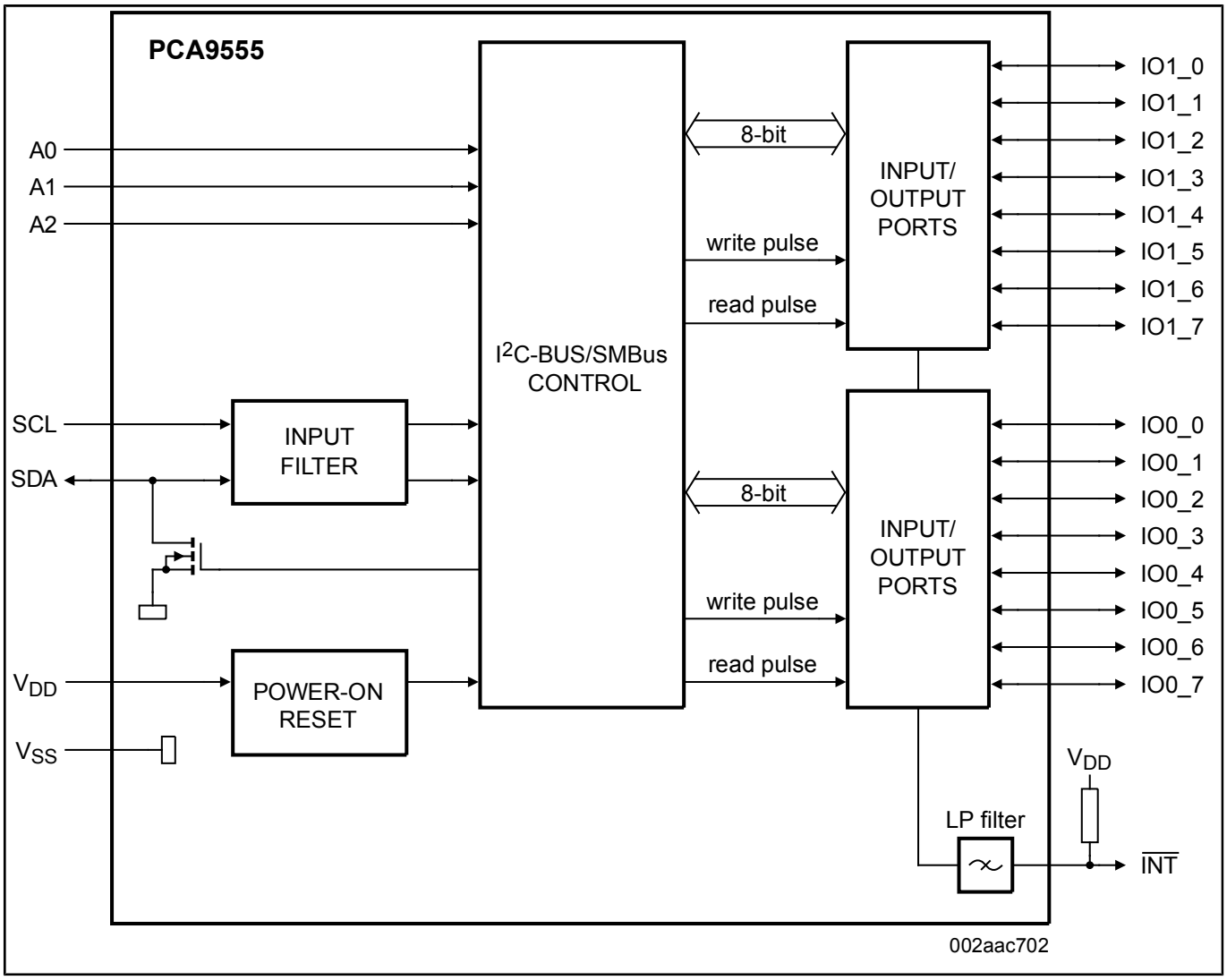

Block diagram: PCA9555BS, PCA9555D, PCA9555DB, PCA9555HF, PCA9555N, PCA9555PW Block Diagram

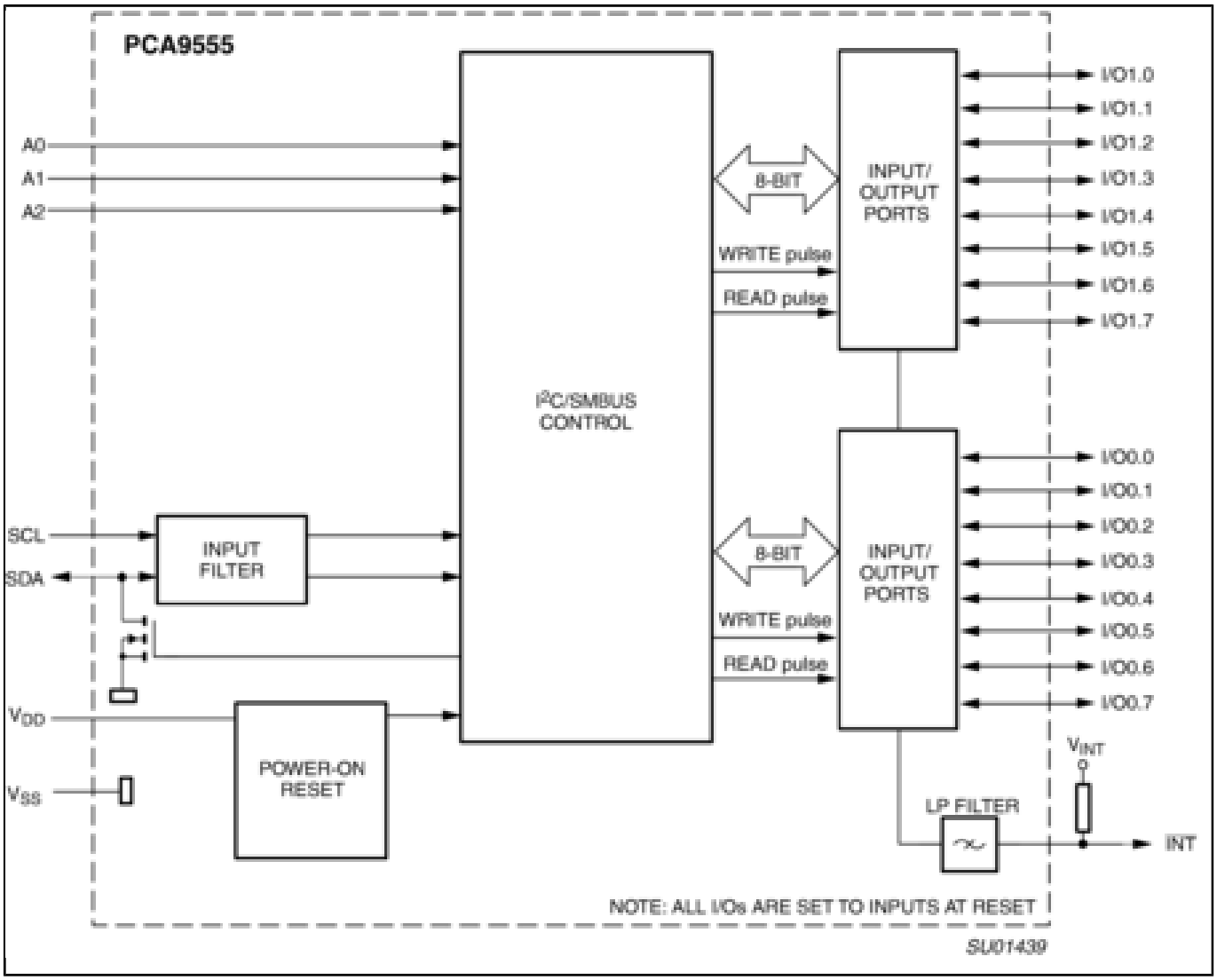

View additional information for 16-Bit I²C-Bus and SMBus I/O Port with Interrupt.

Note: The information on this document is subject to change without notice.

www.nxp.com
NXP and the NXP logo are trademarks of NXP B.V. All other product or service names are the property of their respective owners. The related technology may be protected by any or all of patents, copyrights, designs and trade secrets. All rights reserved. © 2024 NXP B.V.