Warehouse Management

WAREHOUSE-MANAGEMENT

Last Updated: Sep 9, 2024

NXP has a long history of leadership in developing and deploying industry standards. Zigbee networks can participate in the "Internet of Things" (IoT), in both residential and commercial markets, allowing network nodes such as HVAC, lighting and security devices to be remotely monitored and controlled by devices on the Internet.

This system also keepS track of the Components stock levels and when require replenishment, it will raise a notification to the system.

Warehouse Management Block Diagram

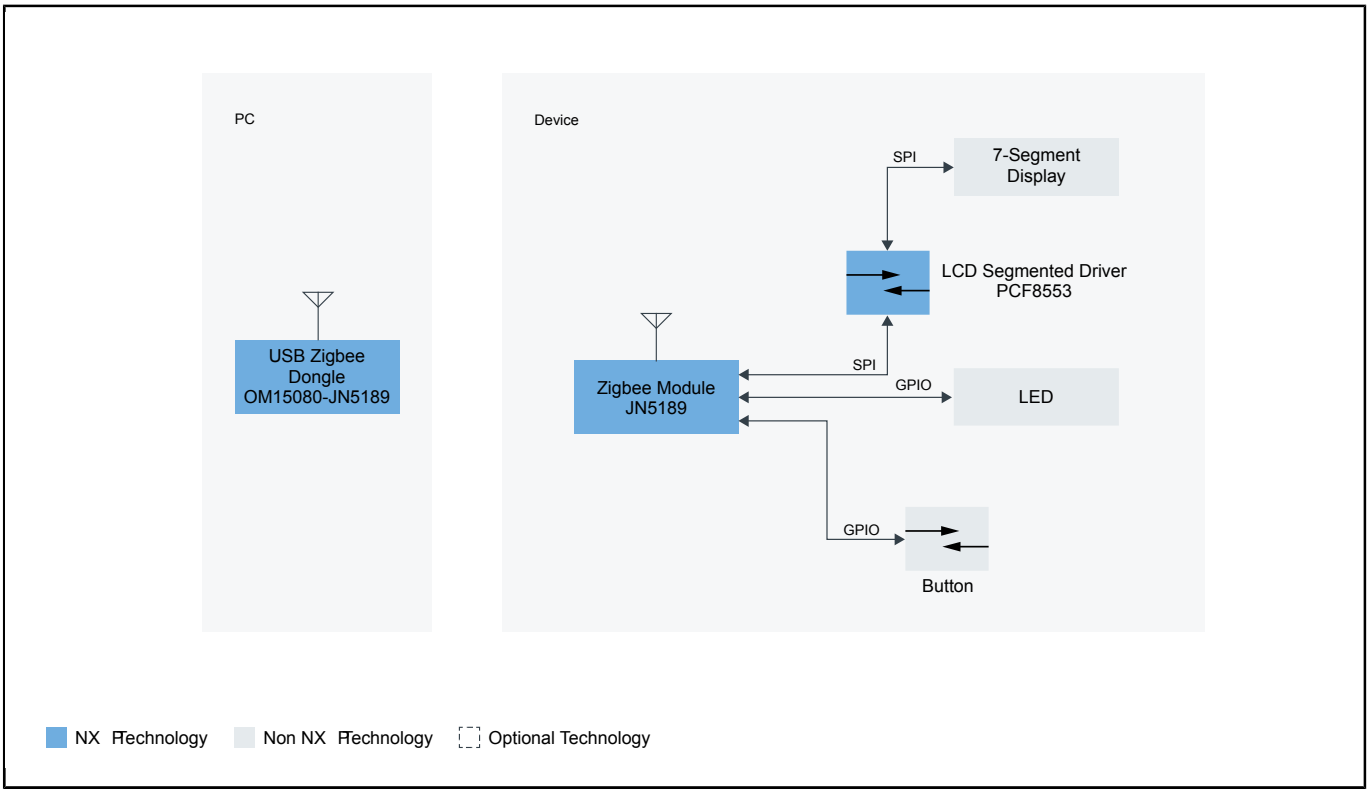

View additional information for Warehouse Management.

Note: The information on this document is subject to change without notice.

www.nxp.com
NXP and the NXP logo are trademarks of NXP B.V. All other product or service names are the property of their respective owners. The related technology may be protected by any or all of patents, copyrights, designs and trade secrets. All rights reserved. © 2024 NXP B.V.