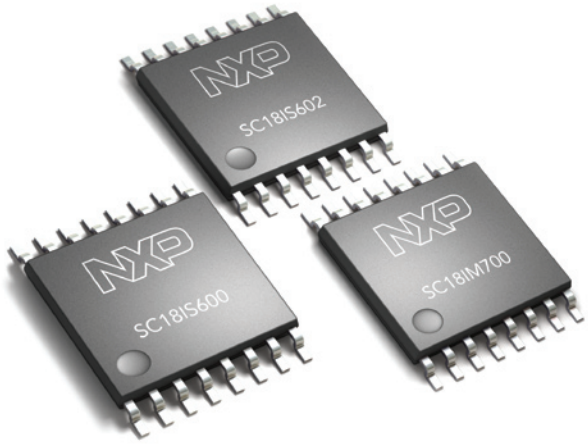

NXP I²C/SPI master bridges SC18IS600/601, SC18IS602/603, and SC18IM700

Connect I²C/SPI slave or UART to I²C/SPI master or GPIO

These compact protocol converters create seamless, low-power, low-voltage interface connections, so they make it quick and easy to add I²C/SPI master and GPIO capability to any application that has an I²C/SPI bus or UART host interface. The result is increased design flexibility with reduced complexity and software overhead, and faster time-to-market.

SC18IS600/601 features

- 2.4- to 3.6-V operation with 5-V-tolerant I/O pins
- High-speed SPI bus slave up to 3 Mbps
- Fast I²C-bus (up to 400 kbps) with multi-master capability
- Up to four GPIO and two quasi-bidirectional I/O pins
- 96-byte transmit and receive buffers
- Power-down mode with a wake-up pin
- Active-low interrupt output
- Industrial temperature range (-40 to +85 °C)
- 16-pin TSSOP package

SC18IS602/603 features

- 2.4- to 3.6-V operation with 5-V-tolerant I/O pins
- High-speed SPI bus master up to 4 Mbps
- Fast I²C bus slave (up to 400 KHz)
- Up to four slave select outputs
- Up to four programmable I/O pins
- 200-byte data buffers
- Low-power mode
- Active-low interrupt output
- Industrial temperature range (-40 to +85 °C)
- 16-pin TSSOP package

SC18IM700 features

- 2.3- to 3.6-V operation with 5-V-tolerant I/O pins
- UART host interface with baud rates up to 460.8 kbps
- Fast I²C-bus (up to 400 kbps) with multi-master capability
- Up to eight GPIO
- 16-byte transmit and receive FIFOs
- 8N1 RS-232 format
- Sleep mode (power-down) with a wake-up pin
- Industrial temperature range (-40 to +85 °C)
- 16-pin TSSOP package

founded by Philips

These low-power bridge ICs simplify design and reduce system cost by making it easy to add devices to an application. They provide an I²C/SPI master interface control to the I²C/SPI bus without a remote host processor. They also provide access to GPIO, so it's easy to expand the host system to support additional functions:

- System monitoring
- Diagnostics
- LCD display control
- Fan control
- LED lighting/blinking
- Button/keypad press detection
- Status information
- EEPROM data storage

Applications

- Handheld computers
- Industrial control / monitoring
- Telecom / Networking
- Portable medical equipment
- Sensor
- Storage
- Gaming machines
- Metering
- Point of sale
- Mobile communication
- Robotic

SC18IS600/601

The NXP I²C master bridges SC18IS600 and SC18IS601 let a host with an SPI bus communicate transparently with I²C-bus devices like LCD displays, temperature/voltage sensors, and EEPROM data storage. The I²C-bus controller has multi-master capability, so it can share the bus with a microcontroller or another I²C master. The high-speed SPI bus slave operates at up to 3 Mbps.

Both devices support 2.4- to 3.6-V operation and offer up to four GPIO and two quasi-bidirectional I/O pins. The I/O pins are tolerant to 5 V.

Both have 96-byte on-chip transmit and receive buffers, use a wake-up pin to support power-down mode, and provide an active-low interrupt output. They operate in the industrial temperature range and are available in a 16-pin TSSOP package.

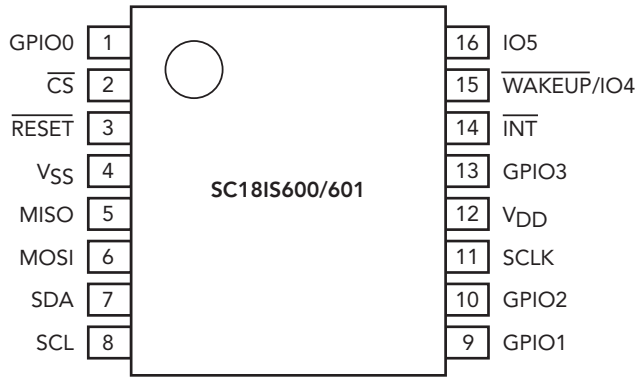

SC18IS600/601 pinout diagram

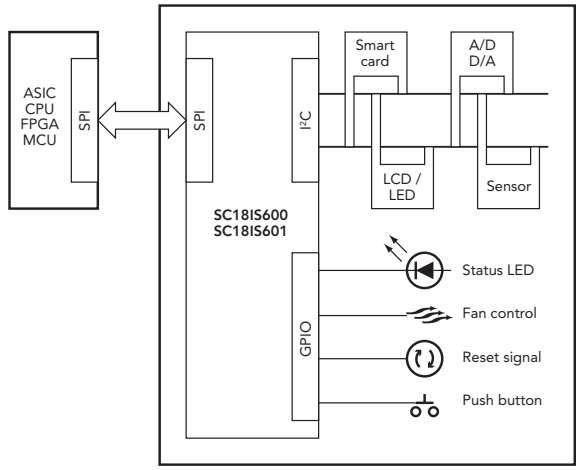

SC18IS600/601 usage scenario

SC18IS602/603

The NXP I²C/SPI master bridges SC18IS602 and SC18IS603 let a host with an I²C bus communicate transparently with SPI-bus devices like LED/LCD displays, temperature/voltage sensors, and EEPROM data storage. The SPI-bus controller can select up to four SPI slave devices. The high-speed SPI bus slave operates at up to 4 Mbps.

Both devices support 2.4- to 3.6-V operation and offer up to four GPIO pins when they are used to select SPI slave devices. The I/O pins are tolerant to 5 V.

Both have 200-byte on-chip data buffers, support low power mode, and provide active-low interrupt output. They operate in the industrial temperature range and are available in a 16-pin TSSOP package.

SC18IM700

The NXP I²C/SPI master bridge SC18IM700 lets a host with an RS-232 connection communicate with remote I²C devices such as temperature sensors, LCD displays, A/D converters, and smart card readers. The same RS-232 connection can also be used to let the host communicate with remote GPIO.

The device supports 2.3- to 3.6-V operation and offers up to eight GPIO. The UART host interface delivers baud rates up to 460.8 kbps, and the fast I²C-bus, which supports multi-master capability, operates up to 400 kbps.

It integrates 16-byte transmit and receive FIFOs, supports the 8N1 RS-232 format, and uses a wake-up pin to support power-down mode. It operates in the industrial temperature range and is available in a 16-pin TSSOP package.

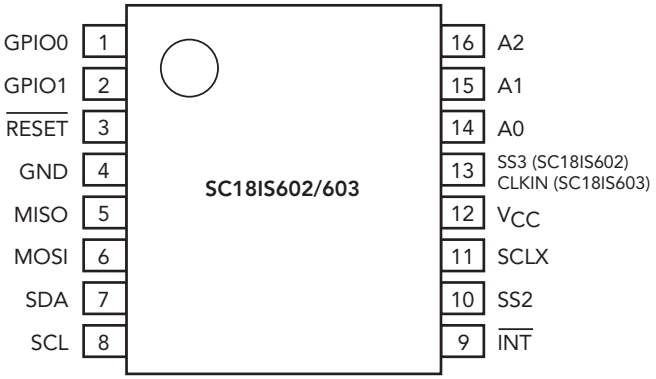

SC18IS602/603 pinout diagram

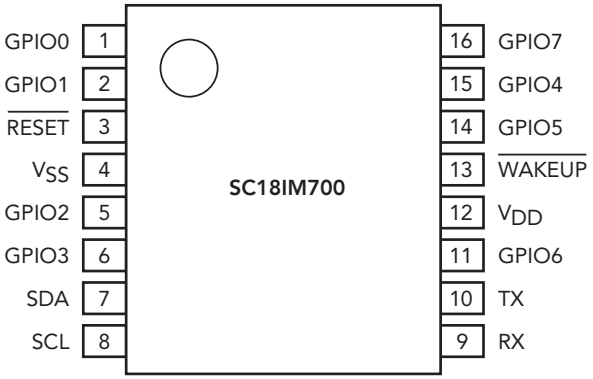

SC18IM700 pinout diagram

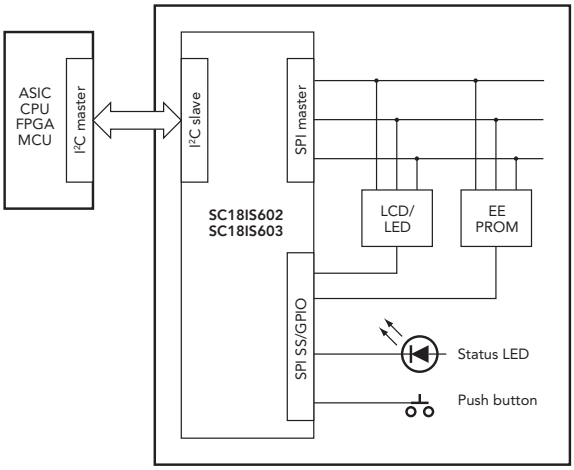

SC18IS602/603 usage scenario

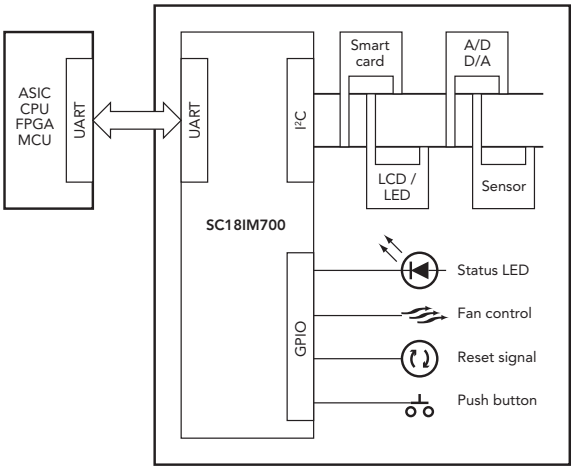

SC18IM700 usage scenario

Feature summary

Type number	SC18IS600IPW	SC18IS601IPW	SC18IS602IPW	SC18IS603IPW	SC18IM700IPW
SPI speed	1 Mbps	3 Mbps	1.8 Mbps	4 Mbps	N/A
UART speed	N/A	N/A	N/A	N/A	460.8 kbps
I^2C bus	400 kHz	400 kHz	400 kHz	400 kHz	400 kHz
Number of GPIO	4	3	4	3	8
Quasi-bidirectional I/O	2	2	0	0	0
SPI chip-select pins			4	3	
Clock	Internal	External	Internal	External	Internal
Package	TSSOP16	TSSOP16	TSSOP16	TSSOP16	TSSOP16
Dimensions	5.0 x 4.4 x 1.1 mm	5.0 x 4.4 x 1.1 mm	5.0 x 4.4 x 1.1 mm	5.0 x 4.4 x 1.1 mm	5.0 x 4.4 x 1.1 mm

For more information, please visit:
www.nxp.com/interface

For technical support, please send questions to:
interface.support@nxp.com

Date of release: November 2006
Document order number: 9397 750 15763
Printed in the USA