Jose Palazzi

Beyond Isolation
Low-cost isolated digital link

This article provides an overview on how to use two ultra-low-cost 8-bit Freescale microcontrollers (MCUs) and an electromagnetic isolation barrier in a self-healed arrangement to implement a multi-channel isolated digital link for potential use in medical diagnostic equipment.

Isolation is a frequent requirement for any application in which common mode voltage can compromise integrity. In medical applications, both the equipment and the patient need protection from hazardous voltages or currents. For instance, electrocardiogram (ECG) systems use sensors that are connected to the patient. If the system causes even a small amount of AC current to flow through the human body, it could be fatal. In another example, the high voltages present in electrodes when defibrillators are operated could potentially kill conditioning circuits in the signal processing patch. Safety regulations, such as IEC60601-1, UL 2601-1, IEC601-1 and CSA C22.2 No. 601, mandate isolation with strict safety laws, rules and guidelines governing the design and construction of medical devices.

Optocouplers, which isolate electronic circuits connected to the patient, offer inherent immunity to electrical or magnetic fields. However, the high input current needed to drive the internal LEDs and its consequent degradation over time limits the long-term use of these devices.

On the other hand, electromagnetic coupling provides extremely high isolation with no degradation. The implementation proposed in this article consists of two MCUs used to control the flow of data across an electromagnetic isolating barrier. Thanks to the highly integrated ultra-low-cost MCUs from Freescale, such as the MC9RS08KA series, multi-channel isolation is possible using just two very small 8-pin devices.

Energy to one side and signal to the other

The block diagram in Figure 1 shows how the 3-input isolated digital link is implemented. Using the single isolation element to transport three signals through the isolation barrier represents a significant cost reduction over individual isolation elements.

An ultra-low-cost 8-pin MCU at the isolated side monitors the logic level of three GPIO pins and packs the information into a serial protocol. Using a special modulation technique, this information is sent through the isolation barrier, made with the transformer, to the demodulator side.

Another ultra-low-cost 8-pin MCU is used at the demodulator side to recover the modulated information. However, instead of decomposing the signals in three pins, this device communicates to a host through a single pin interface, which reduces system I/O count.

3-Input Isolated Digital Link

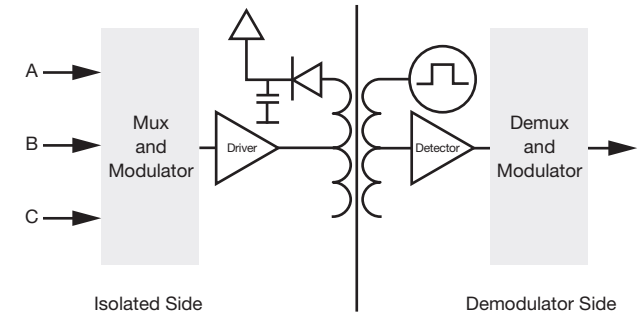

Figure 1

In addition, the proposed solution supplies DC voltage to the isolated side using the transformer as an isolated converter.

A square wave signal generated by the MCU in the demodulator side is used to charge the inductor that is wound in one side of the isolation transformer. Integrating two inductors in the same magnetic core allows energy to be transferred from the demodulator side to the isolated side. A rectifier diode, capacitor and regulator are added to the isolated side to form a stable DC supply source for the MCU.

The typical MCU power consumption suggested for this implementation is 5 mA at 10 MHz clock frequency. The modulation will add approximately 3 mA, thus configuring a maximum power consumption of 8 mA at the isolated side.

Direct Current Modulation

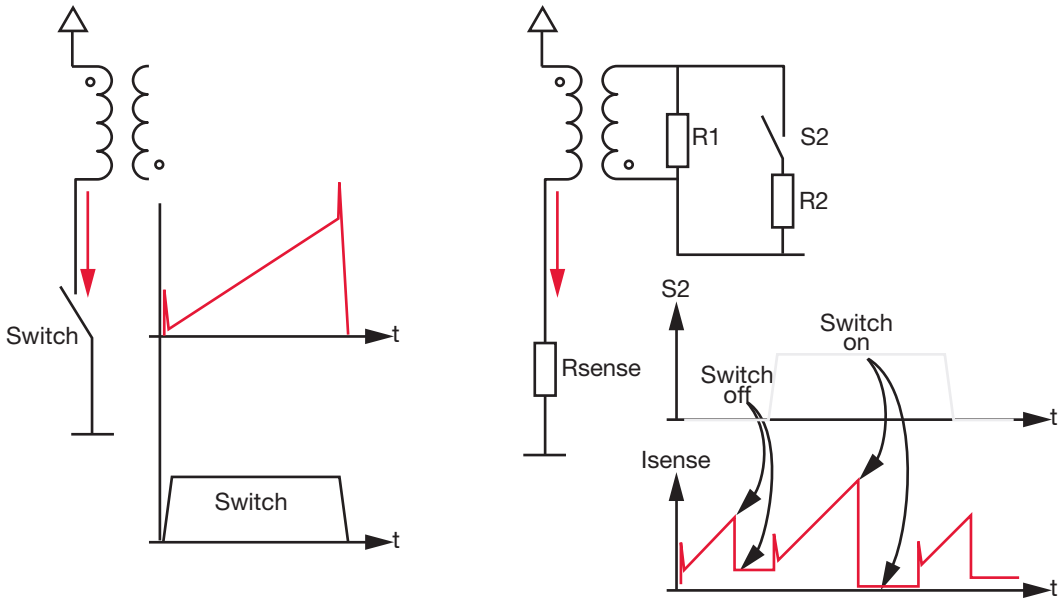

Figure 2

Direct current modulation

This solution is suitable for applications where speed is not as critical as serialization, demodulation and protocol handling, which are performed by the MCU executing instructions in sequence. Thanks to the stable behavior of the isolated circuit at the primary side, a simple technique using direct current modulation can be used with high reliability and repetitiveness without requiring extreme processing horsepower from the MCU. Figure 2 shows how direct current modulation works.

On the left side, when the SWITCH is closed, the DC current across the inductor (primary side of the transformer) follows the equation:

E = L * di / dt where:

E = Voltage applied to the inductor
L = Inductance
di = DC current of the inductor
dt = Charge time

The primary inductance of the transformer is calculated as a function of operating frequency, supply voltage and required max DC current. Energy stored in the transformer during the "on" time is transferred to the secondary side during the "off" time, similar to switched mode power supplies.

Now things become interesting. As the current drained at the secondary side of the transformer is reflected to the primary side, changes in the DC consumption can be detected at the primary side of the transformer.

Figure 3 illustrates how we can transform this into something useful. A hardware level protocol is implemented using a two-level current modulation scheme, with a frame flag alerting the demodulator side when the isolated side is ready to transmit a package. Isync represents the additional average current increase in the primary side when the frame flag is on. After the isolated side sends the serial stream of data, the frame flag is turned off, signaling the demodulator side that the data transfer cycle is finished.

Direct Current Modulation Waveforms

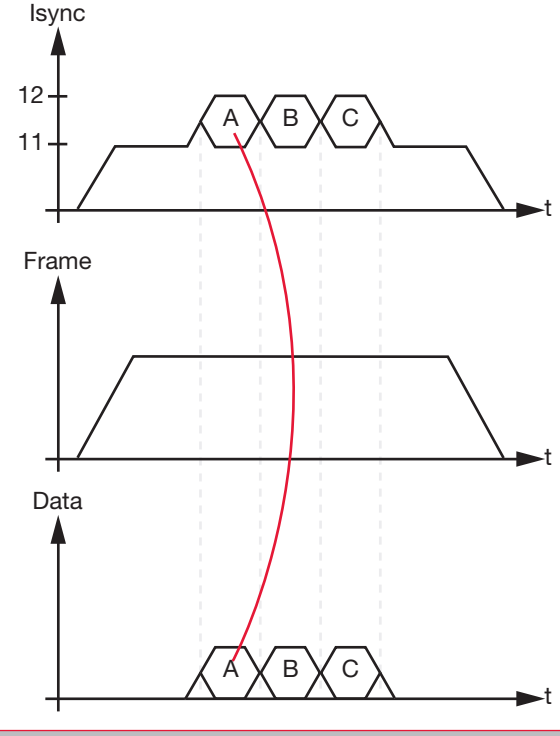

Figure 3

Proposed Isolated Side

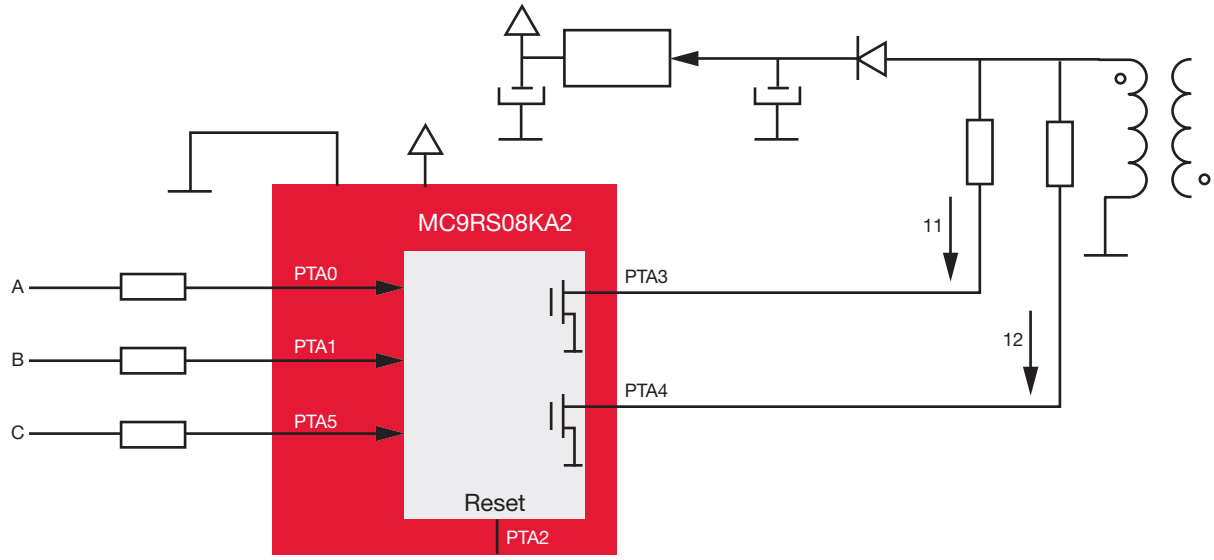

Figure 4

Putting it all together

Figure 4 is a simplified circuit diagram for the proposed isolated side while Figure 5 is a simplified circuit diagram for the proposed demodulator side.

At the isolated side, the rectifier diode, capacitor and series regulator form a DC source to supply V_{DD} to the MCU. The wide supply range Freescale specifies for small MCUs (1.8V to 5.0V) adds flexibility when specifying the transformer. For instance, with a 1:1 transformer excited by a 50 percent duty cycle 5V supply, output voltages of near 2V could be expected at the voltage regulator input.

PTA0, PTA1 and PTA2 pins receive A, B and C signals. PTA3 and PTA4 are connected as current sinks modulating the current consumption directly in the transformer pins. The MCU's low voltage detection (LVD) helps prevent abnormal operation when the supply voltage is not sufficient to guarantee the operating conditions.

On the demodulator side, as illustrated in Figure 5, PTA4 generates a square wave signal to switch on and off the transistor implementing the primary side of the flyback converter. A current sensor resistive element is connected between the emitter and GND so the current level across the transformer and through PTA1 can be measured.

As shown in Figure 4, a sampling window is set to detect the current modulation. The voltage comparator inside the ultra-low-cost MCU has been designed to operate across the full range of the supply voltage (rail-to-rail operation) with extreme flexibility.

Figure 6 shows the internal implementation of the voltage comparator block.

In our demodulator circuit, PTA1 receives the primary current signal through the RC network. A multi-level voltage detector is implemented using the MCU's internal 1.21V reference, and the three-resistor network is implemented around PTA5, generating a reference voltage for the non-inverted input of the voltage comparator. This MCU-controlled network allows the DC current detector to be dynamically configured to detect specific trip points during the system operation and to correlate those to the "truth demodulation table" stored in the MCU's flash memory.

PTA3 is used to deliver a 1200 bps, 8, N, 1 asynchronous TX data signal that can be read by any UART/SCI interface. The firmware in the demodulator side can be configured to generate continuous sampling or to generate a data stream every time a new updated packet is transferred from the isolated side.

Conclusion

This proposed implementation with two ultra-low-cost MCUs does not exhibit high signal speed due to the nature of the MCUs' ability to execute the codes that perform the expected tasks. On the other hand, the cost and longevity of Freescale products offer several advantages over using one optocoupler per signal in low-speed applications. Flexibility for customizations, high breakdown voltage, low power consumption and high immunity to transients along with low cost and increased longevity make the proposed solution favorable for medical applications.

A prototype has been built using two Freescale MC9RS08KA2 MCUs. The RS08 core allows the development of compact code and has been optimized for small memory sizes.

Proposed Demodulator Side

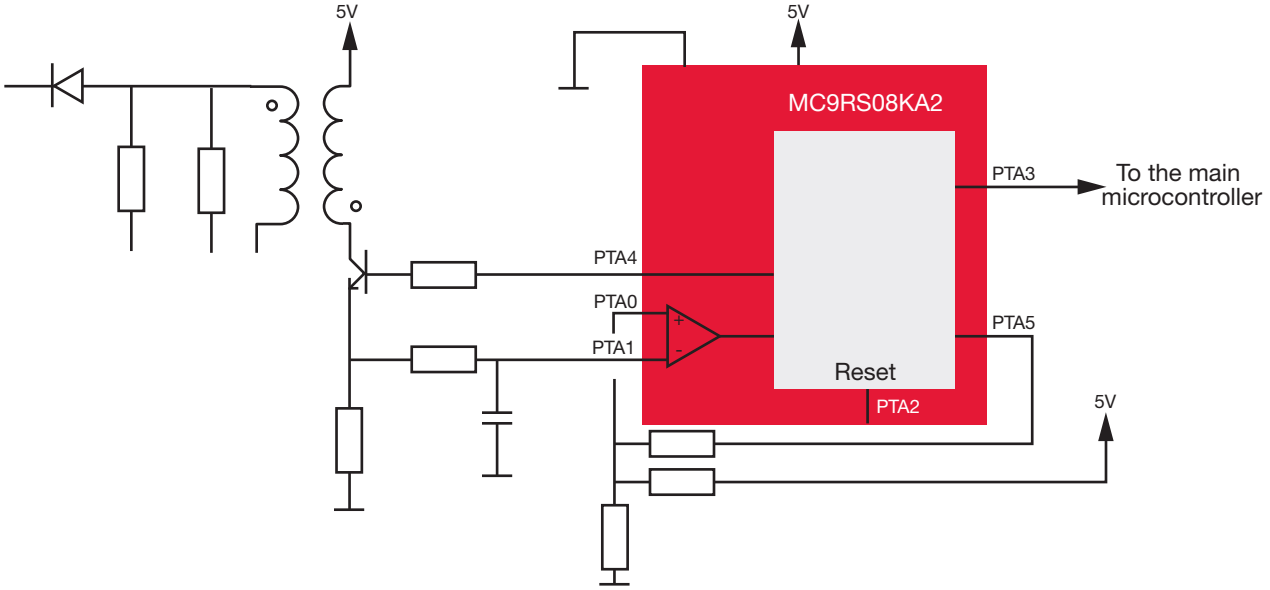

Figure 5

Voltage Comparator Block

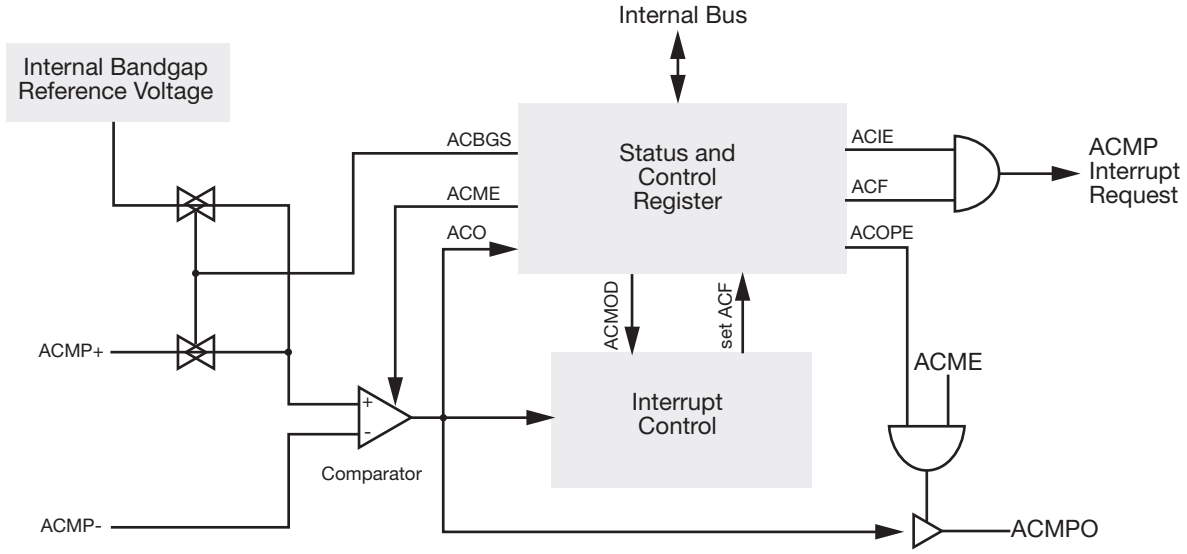

Figure 6

Operating at up to 10 MHz clock speed, with an internal background debug module and a precise trimmable oscillator that ensures greater stability, this small MCU is available in 8-pin DIP and 8-pin SOIC packages.

Breakdown voltages, lower power consumption and immunity to transients have direct effects on the transformer's construction and materials. In experiments conducted by the author with toroidal ferrite cores, breakdown voltages in excess of 8 Kv were repeatedly experienced. Immunity to transients in the HF spectrum (1 MHz to 30 MHz) was obtained using a "drum core" construction associated with good ground planes in the PCB. E-shape cores present high immunity to coupled transients, which allows the operation close to inductive loads connected to a 50–60 Hz AC supply.

Jose Palazzi worked many years as a field application engineer for microcontrollers and microprocessors and has a solid background in the development of electronic circuits for consumer and industrial applications. Jose is a sales account manager in Sao Paulo, Brazil.