Donnie Garcia and Alejandra Guzman Castellanos with Dr. Claudia RenterÌa Govillo

Gestational Diabetes

Technology can help reduce complications

Introduction

Freescale's advances in low-power technology and mixed-signal integration have led to more flexible microcontrollers (MCUs) that feature key peripheral blocks useful for pregnancy monitoring applications, including those for gestational diabetes. In all areas that are important to medical applications—low power, mixed signal integration, display and connectivity—Freescale is delivering the enhanced technology needed for next-generation medical system solutions.

Gestational diabetes

Pregnant women who are not diabetic can still develop high blood sugar (glucose) levels during pregnancy. This is called gestational diabetes, and it affects between one and three percent of all pregnant women. Essentially, the increased production of hormones during pregnancy can lead to insulin resistance, which means insulin cannot effectively lower blood glucose levels. This forces the body to produce more insulin to compensate, which can lead to gestational diabetes.

What's more, even though any woman can develop gestational diabetes, some are at greater risk than are others, including those:

- Older than age 25
- With a family history of diabetes, or those who have had gestational diabetes in a previous pregnancy
- Who have delivered a baby who weighed more than nine pounds or have experienced an unexplained stillbirth
- Who were overweight before pregnancy

In addition, for reasons that aren't clear, Hispanic, American Indian, Asian and black women are more likely to develop gestational diabetes than are other women. And for women already suffering from diabetes, excellent blood glucose control before conception and throughout pregnancy is vital not only for the health of the mother but for that of the baby as well.

During gestational pregnancy, if the glucose levels are not well managed, extra blood glucose passes through the placenta and raises the baby's blood glucose levels. This can increase the baby's body fat and lead to macrosomia (a baby weighing more than nine pounds 15 ounces at birth). Macrosomic babies face their own health problems, including increased risk for breathing problems, child obesity, developing type 2 diabetes and even physical injuries during childbirth.

For all these reasons, accurate blood glucose testing before or early in the pregnancy is essential for quick diagnosis and treatment of gestational diabetes (see Figure 1), particularly since most women will not exhibit early symptoms normally associated with diabetes (excessive thirst and increased urination).

Initial diagnosis may involve an oral glucose tolerance test. This is generally performed in a clinical environment and requires the patient to drink a glucose solution, which is then followed by blood glucose monitoring at specific intervals (see Table 1). However, continual monitoring for diabetic maintenance once the diagnosis has been established is most conveniently done at home, hence the need for accurate home devices.

Example of Oral Glucose Tolerance Test (OGTT)	
Fasting	95 or higher
At 1 hour	180 or higher
At 2 hours	155 or higher
At 3 hours	140 or higher

Note: Some labs use other numbers for this test

*These numbers are for a test using a drink with 100 grams of glucose

Table 1

Advanced semiconductor technology from Freescale, with low power, mixed signal integration and display and connectivity interfaces, make it possible to design small, easy-to-use devices that are ideal solutions for home blood glucose monitoring.

Risk Management for Gestational Diabetes Screening

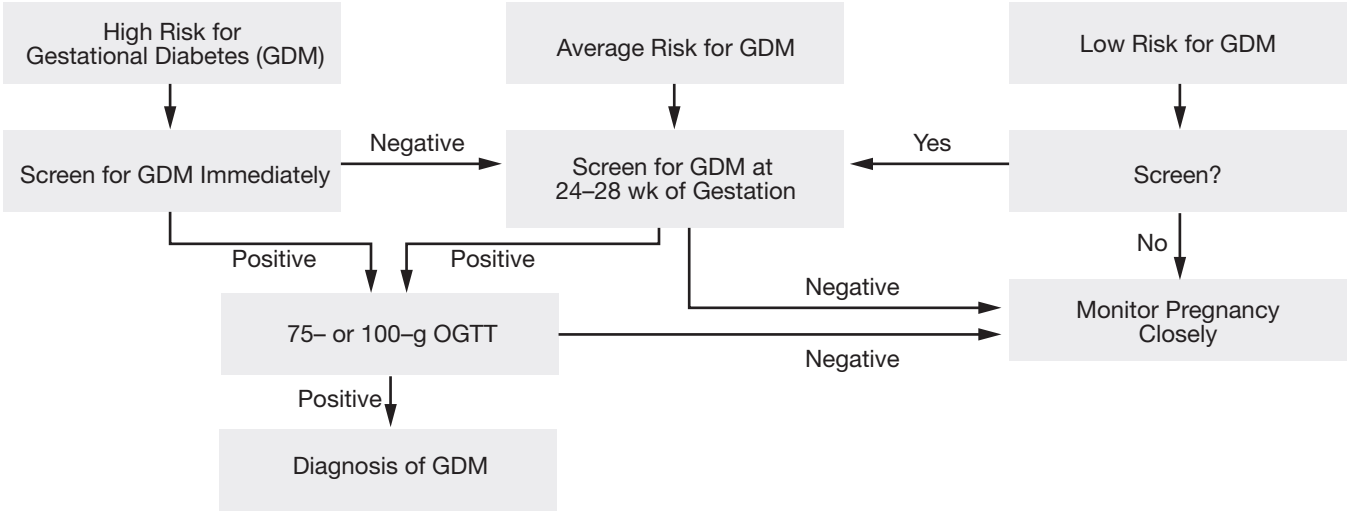

Figure 1

Source: Am J Health-Syst Pharm © 2004 American Society of Health-System Pharmacists

Freescale highly integrated low-power solutions

Combining ultra-low-power platforms with high precision analog peripherals, Freescale has made great strides toward realizing total system solutions for automating many of the application functions in the developing pregnancy monitoring market. Freescale's MCUs can enable significant cost benefits for glucose meter designs, thus providing the benefit of glucose level tracking for more mothers to be.

There are several key focus areas that are important to a wide range of portable medical applications:

- Low power
- Mixed signal integration
- Display technology
- Connectivity

Freescale is delivering the advances needed to enable medical market customers to optimize their products for each of these areas.

Ultra-low-power platform

Freescale MCUs utilize innovative technology to achieve the absolute lowest power for such applications as portable medical devices. The low-power performance of each of the following MCUs makes them ideal for portable medical devices.

- MC9S08LLxx: Cost-efficient entry-level MCU with LCD driver and excellent power consumption
- MC9S08QExx: Best-in-class power consumption for sensor development and medium processing performance at a great price
- MCF51QE: Excellent performance and low-power features. Pin-to-pin compatibility with 9S08QE controllers makes it ideal for enabling medical devices to scale in complexity and functionality

All of these devices contain four main features that are the foundation of low-power operation.

Low-power crystal oscillator

The crystal oscillator is optimized for driving crystals at low power with options for low or high gain modes. This peripheral consumes less than 500 nA for a 32.768 kHz crystal when in low-power modes. With the low-power crystal oscillator, accurate time can be kept while the MCU is in a standby power mode (Stop mode).

Freescale Low-Power MCU Modes of Operation

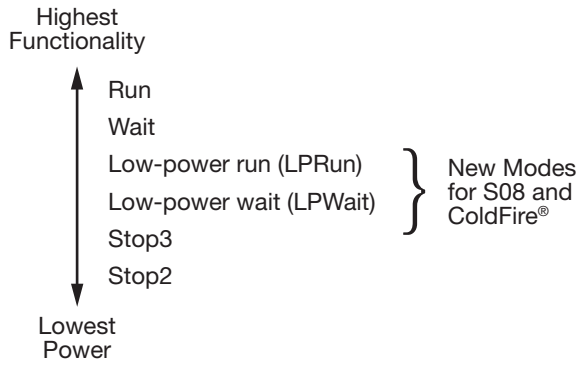

Figure 2

Modes of operation

The energy-efficient MCUs have multiple modes of operation, each tailored to a specific level of functionality to allow the most efficient performance/power consumption tradeoffs. The modes of operation (run, lprun, wait, lpwait, stop2 and stop3) support power consumption as low as 250 nA for some devices and enable medical applications to continuously operate with the highest energy efficiency. The modes of operation also enable many of the MCU's peripherals to operate in low-power run mode to provide the right functionality mix in a low-power mode.

Flexible clock source

Related to the benefits provided by the operating modes, the internal clock (ICS) peripheral on the energy-efficient solutions provides the ability to ramp up or ramp down the device's operating frequency. Higher operating frequencies lead to higher run-mode power consumption. Depending on the application requirements, running at a lower operating frequency will allow the power to be reduced by about 500 µA per Mhz. The ICS will allow the embedded developer to fine tune the MCU's performance to optimize power consumption.

Clock gating

In order to further reduce run-mode power consumption, each of the peripherals on the low-power platform has the ability to be clock gated. Clock gating is a method of shutting down the clock signal that is routed to a peripheral. Though clock gating a single peripheral only reduces power consumption by tens of microamps, when reaching for the lowest power possible, it is essential to reduce every unneeded internal trace and clock signal. When disabling clocks to all peripherals, clock gating has been measured to reduce run mode power consumption by almost one third.

Glucose meter application using Freescale solutions

Utilized together, the features described in the previous section can optimize a portable medical design, such as a blood glucose meter, for more energy-efficient operation.

The low-power oscillator is used to deliver very low standby power consumption while keeping accurate time. This will allow the glucose meter to keep accurate records of measured glucose levels for historical purposes.

Using the flexible modes of operation and the ICS, the glucose meter firmware can be designed so that during the complex calculations necessary to produce a glucose measurement the MCU performance can be increased in order to shorten the processing time, thereby improving the user experience.

Finally, additional power savings can be achieved with the clock gating technology. Using all the low-power techniques together

Blood Glucose Meter Block Diagram

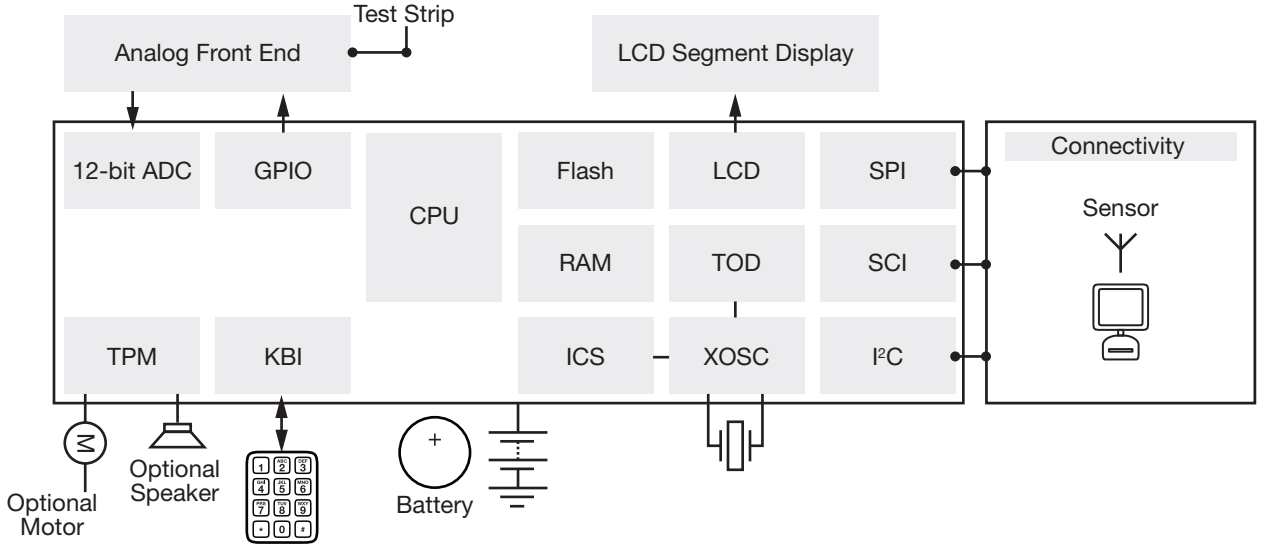

Figure 3

will allow the meter to function much longer on a single battery charge, and it will enable developers to use a smaller battery, thus enhancing portability and the user experience.

Mixed signal integration

Essential to a glucose meter design is the ability to make small signal analysis of the electro-chemical reaction initiated by a glucose measurement. One stage of the analysis is recognizing the peak of the biosensor's electrical output. Utilizing the analog comparator (ACMP) peripheral, the Freescale MCU can be configured to trigger an interrupt once the peak has been reached.

The next stage requires precisely timed analog-to-digital conversions of the glucose meter strip's linearly decaying output. Many Freescale devices contain a feature-rich 12-bit analog-to-digital converter (ADC) that enables these measurements. The ADC has features, such as automatic compare and flexible conversion time settings, that are ideal for this type of analysis.

Finally, the CPU (8-bit or 32-bit) is used for the mathematical analysis. The chemical reaction between the sample (blood) and glucose meter strip produces a linearly decaying signal that is processed across a couple of seconds. The CPU performs some filtering of the input signals over time using average routines or the more complex IIR filtering. The average is taken at several points along the input signal's linear decay, from which the slope of the linear decay is calculated. It is this slope that will directly correlate to a specific value for the blood glucose level.

The on-chip integration of analog functionality on Freescale MCUs provides many system cost benefits. The obvious benefit is that it decreases the need for external ICs, thus reducing the BOM and board space. But on-chip analog also features low-voltage detection and internal bandgap reference voltages, which further lower overall cost.

Blood Glucose Meter Software Flow Chart

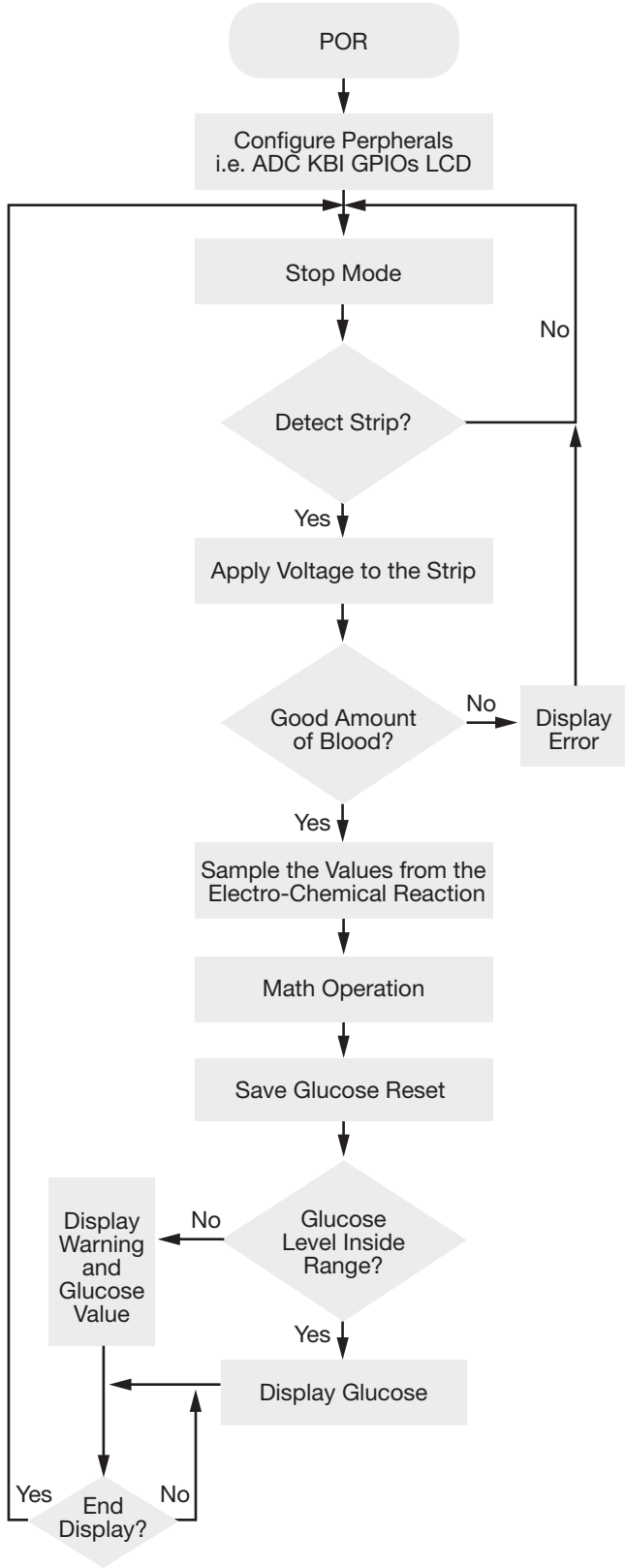

Figure 4

Display capabilities

With the launch of the L family of 8-bit MCUs with integrated LCD peripherals, Freescale provides the ideal display functionality for portable medical devices. The LCD peripheral on these devices contains key features that will reduce cost and provide more functionality for glucose meters.

First, Freescale has added the ability to assign front plane (segment) or backplane (common) functionality on any of the MCU's pins. With this feature, signal layout can be optimized so that PCB board space can be reduced. This feature also allows quick changes of LCD glass design because the hardware change can be handled by a software update. An excellent example of a flexible LCD driver is described in the Freescale application note, LCD Driver Specification, which can be downloaded as a PDF from **www.freescale.com** (document number AN3796).

Second, the new LCD peripheral has the ability to drive more segments with fewer pins, utilizing x8 muxing of the LCD signals. With this function it only takes 28 pins (8 x 20) to drive 160 LCD segments. The same functionality requires 44 pins on many competing devices. By using fewer pins, board size and connector space are reduced, enabling more compact portable medical designs.

Finally, the LCD peripheral architecture is designed to provide the most energy-efficient performance. Low power was considered for every aspect of the design. The end result is the ability to drive LCD glass with total system power as low as 1.5 µA with LCD glass connected. This performance, along with low-power blinking mode (the ability to blink the display while in stop mode), allows product developers to lower average power consumption by up to 70 percent for their portable medical designs. This will lead to significantly longer battery life and further cost reductions in the types of batteries needed for the end device.

In glucose meter designs, a visual display is mandatory for patients to be able to read the metering results. With Freescale's S08L family, LCD functionality and best-in-class power consumption can be achieved with a single device. Freescale also provides software routines that allow easy glass customization and fast LCD GUI development. In addition, by consulting the LCD Driver Specification application note, designers can reduce their overall development time.

Connectivity

The ability to transfer information from the blood glucose meter to a computer for analysis is an important option for new meter designs. Freescale MCUs integrate key peripherals essential for providing this connectivity, such as SPI, SCI and I^2C, that allow data transfers within systems. Using the SPI, the MCU can easily connect to a ZigBee® transceiver to provide flexible, low-power wireless connectivity.

Conclusions

Freescale's advances in low power and mixed signal integration have led to the development of MCUs that feature key components for glucose monitoring applications used during the diagnosis and treatment of gestational diabetes. Though current Freescale devices provide many benefits, the company is dedicated to further improve low power, mixed-signal integration, display and connectivity features to benefit the pregnancy monitoring market.

Bibliography

www.diabetes.org

www.diabetes.niddk.nih.gov/dm/pubs/gestational/

Gestational diabetes: Test and diagnosis—www.mayoclinic.com

www.familydoctor.org/online/famdocen/home/women/pregnancy/complications/075.html

Donnie and Ale both support Freescale's Microcontroller Solutions Group. During Donnie's 10 years with the company, he has worked as an applications engineer supporting 8-bit MCUs and has been heavily involved with the product definition of the new S08 MCUs. Ale has supported customers through Freescale's Technical Information Center (TIC) after collaborating for systems and solutions engineering, working on medical applications.