Freescale Semiconductor, Inc.

MOTOROLA
intelligence everywhere™

digital dna™

3-phase BLDC Motor Control with Sensorless Back-EMF ADC Zero Crossing Detection Using 56F805

Designer Reference Manual

DRM026/D
Rev. 0, 03/2003

56800
Hybrid Controller

MOTOROLA.COM/SEMICONDUCTORS

Freescale Semiconductor, Inc.

For More Information On This Product,
Go to: www.freescale.com

Freescale Semiconductor, Inc.

3-phase BLDC Motor Control with Sensorless Back-EMF ADC Zero Crossing Detection Using the 56F805

Designer Reference Manual — Rev 0

by: Libor Prokop
Motorola Czech System Laboratories
Roznov pod Radhostem, Czech Republic

Freescale Semiconductor, Inc.

For More Information On This Product,
Go to: www.freescale.com

Revision history

To provide the most up-to-date information, the revision of our documents on the World Wide Web will be the most current. Your printed copy may be an earlier revision. To verify you have the latest information available, refer to:

http://www.motorola.com/semiconductors

The following revision history table summarizes changes contained in this document. For your convenience, the page number designators have been linked to the appropriate location.

Revision history

Date	Revision Level	Description	Page Number(s)
February, 2003	1	Initial release	N/A

Freescale Semiconductor, Inc.

For More Information On This Product,
Go to: www.freescale.com

List of Sections

Section 1. Introduction 15
Section 2. System Description. 17
Section 3. BLDC Motor Control 23
Section 4. Hardware Design. 57
Section 5. Software Design 79
Section 6. Software Algorithms 103
Section 7. Customization Guide 157
Section 8. Application Setup 169
Appendix A. References. 185
Appendix B. Glossary. 187

Freescale Semiconductor, Inc.

For More Information On This Product,
Go to: www.freescale.com

List of Sections

Freescale Semiconductor, Inc.

For More Information On This Product,
Go to: www.freescale.com

Table of Contents

Section 1. Introduction

1.1 Contents 15
1.2 Application Functionality 15
1.3 Benefits of the Solution 15

Section 2. System Description

2.1 Contents 17
2.2 System Specification 17
2.3 System Concept 20

Section 3. BLDC Motor Control

3.1 Contents 23
3.2 Brushless DC Motor Control Theory 23
3.3 Control Technique 38

Section 4. Hardware Design

4.1 Contents 57
4.2 System Configuration and Documentation 57
4.3 All HW Sets Components 66
4.4 Low-Voltage Evaluation Motor Hardware Set Components . . . 68
4.5 Low-Voltage Hardware Set Components 70
4.6 High-Voltage Hardware Set Components 73

Freescale Semiconductor, Inc.

For More Information On This Product,
Go to: www.freescale.com

Section 5. Software Design

5.1 Contents 79
5.2 Introduction 79
5.3 Main SW Flow Chart 79
5.4 Data Flow 82
5.5 State Diagram 88

Section 6. Software Algorithms

6.1 Contents 103
6.2 Introduction 103
6.3 BLDC Motor Commutation with Zero Crossing Sensing 103

Section 7. Customization Guide

7.1 Contents 157
7.2 Application Suitability Guide 157
7.3 Setting of SW Parameters for Customer Motor 159

Section 8. Application Setup

8.1 Contents 169
8.2 Introduction 169
8.3 Warning 169
8.4 Application Outline 170
8.5 Application Description 171
8.6 Application Set-Up 175
8.7 Projects Files 180
8.8 Application Build & Execute 182

Appendix A. References

Freescale Semiconductor, Inc.

For More Information On This Product,
Go to: www.freescale.com

Appendix B. Glossary

Freescale Semiconductor, Inc.

For More Information On This Product,
Go to: www.freescale.com

Table of Contents

Freescale Semiconductor, Inc.

For More Information On This Product,
Go to: www.freescale.com

List of Figures

Figure	Title	Page
2-1	System Concept	21
3-1	BLDC Motor - Cross Section	24
3-2	Three Phase Voltage System	25
3-3	BLDC Motor - Back EMF and Magnetic Flux	26
3-4	Classical System	27
3-5	Power Stage - Motor Topology	28
3-6	Phase Voltage Waveforms	32
3-7	Mutual Inductance Effect	32
3-8	Detail of Mutual Inductance Effect	34
3-9	Mutual Capacitance Model	35
3-10	Distributed Back-EMF by Unbalanced Capacity Coupling	36
3-11	Balanced Capacity Coupling	37
3-12	PWM with BLDC Power Stage	39
3-13	3-phase BLDC Motor Commutation PWM Signal	40
3-14	BLDC Commutation with Bipolar (Hard) Switching	41
3-15	BEMF Zero Crossing Synchronization with PWM	44
3-16	Commutation Control Stages	45
3-17	Alignment	46
3-18	Flow Chart - BLDC Commutation with BEMF Zero Crossing Sensing	48
3-19	BLDC Commutation Times with Zero Crossing sensing	49
3-20	Vectors of Magnetic Fields	53
3-21	Back-EMF at Start-Up	54
3-22	Calculation of the Commutation Times during the Starting (Back-EMF Acquisition) Stage	55
4-1	Low-Voltage Evaluation Motor Hardware System Configuration	60
4-2	Low-Voltage Hardware System Configuration	62

For More Information On This Product,
Go to: www.freescale.com

Freescale Semiconductor, Inc.

List of Figures

4-3 High-Voltage Hardware System Configuration 64
4-4 Block Diagram of the DSP56F805EVM 67
4-5 Block Diagram 71
4-6 3-Phase AC High Voltage Power Stage 74
5-1 Main Software Flow Chart - Part 1 81
5-2 Main Software Flow Chart - Part 2 82
5-3 Data Flow - Part 1 83
5-4 Data Flow - Part 2 84
5-5 Data Flow - Part3 85
5-6 Closed Loop Control System 87
5-7 State Diagram - Process Application State Machine 91
5-8 State Diagram - Process Commutation Control 93
5-9 Substates - Running 94
5-10 State Diagram - Process ADC Zero Crossing Checking 97
5-11 State Diagram - Process ADC Zero Crossing Offset Setting . . 98
5-12 State Diagram - Process Speed PI Controller 99
5-13 State Diagram - Process Speed PI Controller 100
6-1 bldczc_sTimes Structure Members and BLDC Commutation with Zero Crossing Sensing 114
8-1 RUN/STOP Switch and UP/DOWN Buttons at DSP56F805EVM 172
8-2 USER and PWM LEDs at DSP56F805EVM 172
8-3 PC Master Software Control Window 174
8-4 Set-up of the BLDC Motor Control Application using DSP56F805EVM 175
8-5 Set-up of the Low-Voltage BLDC Motor Control Application . 176
8-6 Set-up of the High-Voltage BLDC Motor Control Application . 177
8-7 DSP56F805EVM Jumper Reference 179
8-8 Target Build Selection 182
8-9 Execute Make Command 183

Freescale Semiconductor, Inc.

For More Information On This Product,
Go to: www.freescale.com

List of Tables

Table	Title	Page
2-1	Low Voltage Evaluation Hardware Set Specifications	18
2-2	Low Voltage Hardware Set Specifications	18
2-3	High Voltage Evaluation Hardware Set Specifications	19
4-1	Electrical Characteristics of the EVM Motor Board	69
4-2	Characteristics of the BLDC motor	69
4-3	Electrical Chatacteristics of the 3-Ph BLDC Low Voltage Power Stage	72
4-4	Electrical Characteristics of Power Stage	75
4-5	Electrical Characteristics	76
6-1	bldczc_sTimes structure members	112
6-2	bldczc_sStates Structure Members	115
6-3	*bldczc_sStateComput* structure members	115
6-4	*bldczc_sStateCmt* structure members	116
6-5	*bldczc_sStateZCros* structure members	116
6-6	*bldczc_sStateGeneral* structure members	117
6-7	bldczcHndlrInit arguments	118
6-8	bldczcHndlr arguments	122
6-9	bldczcTimeoutIntAlg arguments	125
6-10	bldczcTimeoutIntAlg events	126
6-11	bldczcHndlrStop arguments	129
6-12	bldczcComputInit arguments	130
6-13	bldczcComput arguments	131
6-14	bldczcCmtInit arguments	134
6-15	bldczcCmtServ arguments	135
6-16	bldczcZCInit arguments	136
6-17	bldczcZCrosIntAlg arguments	138
6-18	bldczcZCrosEdgeIntAlg arguments	144
6-19	bldczcZCrosServ arguments	151
6-20	bldczcZCrosEdgeServ arguments	153

For More Information On This Product,
Go to: www.freescale.com

Freescale Semiconductor, Inc.

List of Tables

7-1 SW Parameters Marking. 160
7-2 Start-up Periods 163
8-1 Motor Application States. 173
8-2 DSP56F805EVM Jumper Settings 179

Freescale Semiconductor, Inc.

For More Information On This Product,
Go to: www.freescale.com

Section 1. Introduction

1.1 Contents

1.2 Application Functionality 15

1.3 Benefits of the Solution 15

1.2 Application Functionality

This Reference Design describes the design of a 3-phase sensorless brushless dc (BLDC) motor control with back-EMF (electromotive force) zero-crossing sensing using an AD convertor. It is based on Motorola's DSP56F805 DSP which is dedicated for motor control applications. The system is designed as a motor drive system for three phase BLDC motors and is targeted for applications in both industrial and appliance fields (e.g. compressors, air conditioning units, pumps or simple industrial drives). The reference design incorporates both hardware and software parts of the system including hardware schematics.

1.3 Benefits of the Solution

The design of very low cost variable speed BLDC motor control drives has become a prime focus point for the appliance designers and semiconductor suppliers.

Today more and more variable speed drives are put in appliance or automotive products to increase the whole system efficiency and the product performance. Using of the control systems based on semiconductor components and MCUs or DSPs is mandatory to satisfy requirements for high efficiency, performance and cost of the system.

Freescale Semiconductor, Inc.

For More Information On This Product,
Go to: www.freescale.com

Once using the semiconductor components, it is opened to replace classical universal and DC-motors with maintenance-free electrically commutated BLDC motors. This brings many advantages of BLDC motors when the system costs could be maintained equivalent.

The advantages of BLDC motor versus universal and DC-motors are:

- high efficiency
- reliability (no brushes)
- low noise
- easy to drive features

To control the BLDC motor, the rotor position must be known at certain angles in order to align the applied voltage with the back-EMF, which is induced in the stator winding due to the movement of the permanent magnets on the rotor.

Although some BLDC drives uses sensors for position sensing, there is a trend to use sensorless control. The position is then evaluated from voltage or current going to the motor. One of the sensorless technique is sensorless BLDC control with back-EMF (electromotive force) zero-crossing sensing.

The advantages of this control are:

- Save cost of the position sensors & wiring
- Can be used where there is impossibility or expansive to make additional connections between position sensors and the control unit
- Low cost system (medium demand for control DSP power)

Freescale Semiconductor, Inc.

For More Information On This Product,
Go to: www.freescale.com

Section 2. System Description

2.1 Contents

2.2 System Specification 17

2.3 System Concept 20

2.2 System Specification

The system was designed to meet the following performance specifications:

- Control technique incorporates
  - using A/D convertor for sensorless Back-EMF Zero Crossing commutation control
  - motoring mode
  - single speed feedback loop
  - both direction of the rotation
- Targeted for DSP56F805EVM platforms
- Running on one of three optional board and motor hardware sets
  - Low Voltage Evaluation Motor hardware set
  - Low Voltage hardware set
  - High Voltage hardware set at variable line voltage 115 - 230V AC
- Over-voltage, Under-voltage, Over-current, and Temperature Fault protection
- Manual Interface (Start/Stop switch, Up/Down push button control, LED indication)

For More Information On This Product,
Go to: www.freescale.com

Freescale Semiconductor, Inc.

- PCMaster Interface
- Power Stage Identification with control parameters set according to used hardware set

The introduced BLDC motor control drive with Back-EMF Zero Crossing using A/D convertor is designed as a DSP system that meets the following general performance requirements:

Table 2-1. Low Voltage Evaluation Hardware Set Specifications

Hardware Boards Characteristics	Input voltage:	12 Vdc
	Maximum dc-bus voltage:	16.0 V
	Maximal output current:	4.0 A
Motor Characteristics	Motor type:	4 poles, three phase, star connected, BLDC motor
	Speed range:	< 5000 rpm (at 60 V)
	Maximal line voltage:	60 V
	Phase current:	2 A
	Output torque:	0.140 Nm (at 2 A)
Drive Characteristics	Speed range:	< 1400 rpm
	Input voltage:	12 Vdc
	Maximum dc-bus voltage:	15.8 V
	Protection:	Over-current, over-voltage, and under-voltage fault protection
Load Characteristic	Type:	Varying

Table 2-2. Low Voltage Hardware Set Specifications

Hardware Boards Characteristics	Input voltage:	12 Vdc or 42 V
	Maximum dc-bus voltage:	16.0 V or 55.0 V
	Maximal output current:	50.0 A

For More Information On This Product,
Go to: www.freescale.com

Freescale Semiconductor, Inc.

Table 2-2. Low Voltage Hardware Set Specifications

Motor -Brake Set	Manufactured	EM Brno, Czech Republic
Motor Characteristics	Motor type:	EM Brno SM40N 3 phase, star connected BLDC motor,
	Pole-Number:	6
	Speed range:	3000 rpm (at 12 V)
	Maximum electrical power:	150 W
	Phase voltage:	3*6.5 V
	Phase current:	17 A
Brake Characteristics	Brake Type:	SG40N 3-Phase BLDC Motor
	Nominal Voltage:	3 x 27 V
	Nominal Current:	2.6 A
	Pole-Number:	6
	Nominal Speed:	1500 rpm
Drive Characteristics	Speed range:	< 2500 rpm
	Input voltage:	12 Vdc
	Maximum dc-bus voltage:	15.8 V
	Protection:	Over-current, over-voltage, and under-voltage fault protection
Load Characteristic	Type:	Varying

Table 2-3. High Voltage Evaluation Hardware Set Specifications

Hardware Boards Characteristics	Input voltage:	230 Vac or 115 Vac
	Maximum dc-bus voltage:	407 V
	Maximal output current:	2.93A
Motor -Brake Set	Manufactured	EM Brno, Czech Republic

For More Information On This Product,
Go to: www.freescale.com

Freescale Semiconductor, Inc.

Table 2-3. High Voltage Evaluation Hardware Set Specifications

Motor Characteristics	Motor type:	EM Brno SM40V 3 phase, star connected BLDC motor,
	Pole-Number:	6
	Speed range:	2500 rpm (at 310 V)
	Maximum electrical power:	150 W
	Phase voltage:	3*220 V
	Phase current:	0.55 A
Brake Characteristics	Brake Type:	SG40N 3-Phase BLDC Motor
	Nominal Voltage:	3 x 27 V
	Nominal Current:	2.6 A
	Pole-Number:	6
	Nominal Speed:	1500 rpm
Drive Characteristics	Speed range:	< 2500 rpm (determined by motor used)
	Maximum dc-bus voltage:	380 V
	Optoisolation:	Required
	Protection:	Over-current, over-voltage, and under-voltage fault protection
Load Characteristic	Type:	Varying

2.3 System Concept

The chosen system concept is shown below. The sensorless rotor position detector detects the Zero Crossing points of Back-EMF induced in non-fed motor windings. The obtained information is processed in order to commutate energized phase pair and control the phase voltage, using Pulse-Width-Modulation.

Freescale Semiconductor, Inc.

For More Information On This Product,
Go to: www.freescale.com

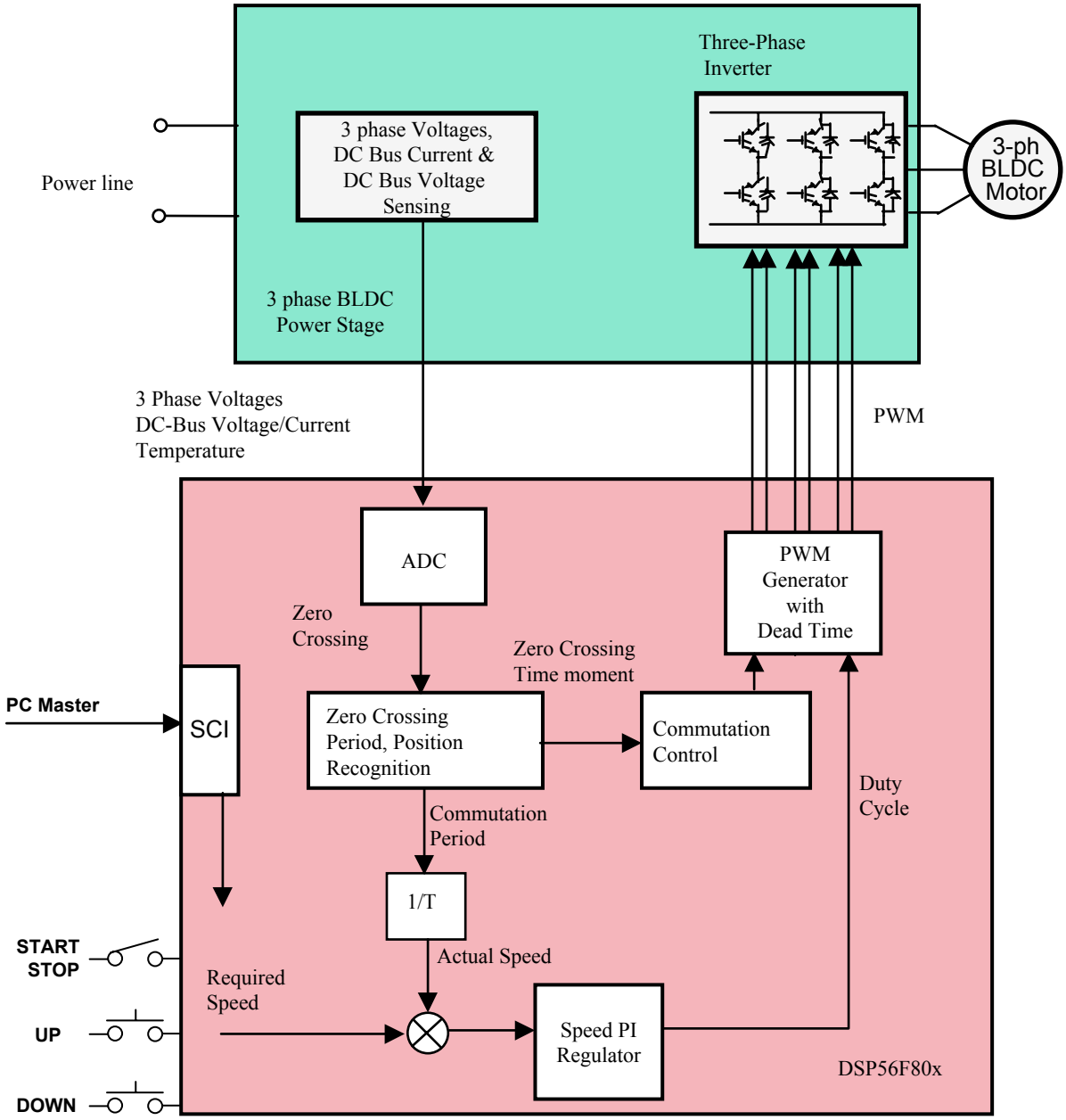

Figure 2-1. System Concept

The resistor network is used to divide sensed voltages down to a 0-3.3V voltage level. Zero Crossing detection is synchronized with the center of center aligned PWM signal by the software in order to filter high voltage spikes produced by the switching of the IGBTs (MOSFETs).

For More Information On This Product,
Go to: www.freescale.com

Freescale Semiconductor, Inc.

The divided phase voltages are connected to the A/D convertor module on the DSP and are processed in order to get the Back-EMF Zero Crossing signal. The Back-EMF Zero Crossing detection enables position recognition, as explained in previous sections. The software selects one of the phases which corresponds to the present commutation step.

A current shunt is used to measure the dc-bus current. The obtained signal is rectified and amplified (0-3.3V with 1.65V offset). The DSP A/D converter as well as Zero Crossing detection is synchronized with the PWM signal. This synchronization avoids spikes when the IGBTs (or MOSFETs) are switching and simplifies the electric circuit.

The A/D converter is also used to sense the dc-bus voltage and drive Temperature. The dc-bus voltage is divided down to a 3.3V signal level by a resistor network.

The six IGBTs (copack with built-in fly back diode) or MOSFETs and gate drivers create a compact power stage. The drivers provide the level shifting that is required to drive high side bridge circuits commonly used in motor drives. The PWM technique is applied to the control motor phase voltage.

Freescale Semiconductor, Inc.

For More Information On This Product,
Go to: www.freescale.com

Section 3. BLDC Motor Control

3.1 Contents

3.2 Brushless DC Motor Control Theory 23

3.3 Control Technique 38

3.2 Brushless DC Motor Control Theory

3.2.1 BLDC Motor Targeted by This Application

The Brushless DC motor (BLDC motor) is also referred to as an electronically commuted motor. There are no brushes on the rotor and the commutation is performed electronically at certain rotor positions. The stator magnetic circuit is usually made from magnetic steel sheets. The stator phase windings are inserted in the slots (distributed winding) as shown in **Figure 3-1** or it can be wound as one coil on the magnetic pole. The magnetization of the permanent magnets and their displacement on the rotor are chosen such a way that the Back-EMF (the voltage induced into the stator winding due to rotor movement) shape is trapezoidal. This allows the three phase voltage system (see **Figure 3-2**), with a rectangular shape, to be used to create a rotational field with low torque ripples.

The motor can have more then just one pole-pair per phase. This defines the ratio between the electrical revolution and the mechanical revolution. The BLDC motor shown has three pole-pairs per phase which represent three electrical revolutions per one mechanical revolution.

For More Information On This Product,
Go to: www.freescale.com

Freescale Semiconductor, Inc.

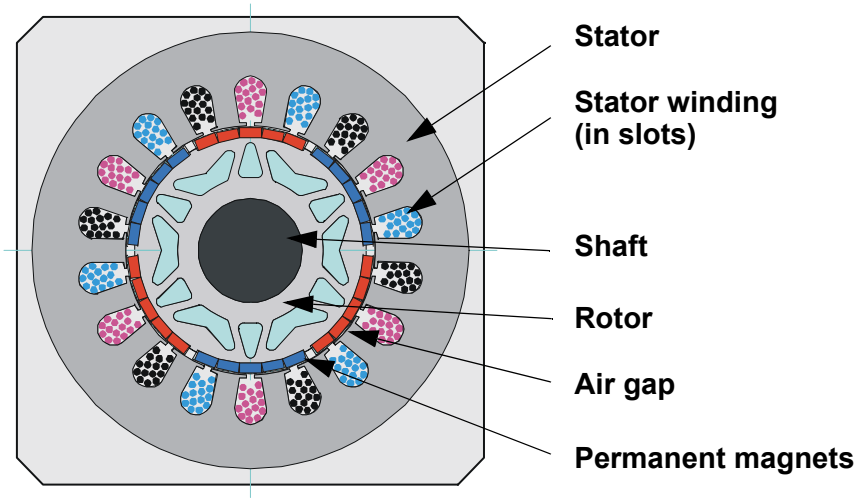

Figure 3-1. BLDC Motor - Cross Section

The rectangular, easy to create, shape of applied voltage ensures the simplicity of control and drive. But the rotor position must be known at certain angles in order to align the applied voltage with the Back-EMF. The alignment between Back-EMF and commutation events is very important. In this condition the motor behaves as a DC motor and runs at the best working point. Thus simplicity of control and good performance make this motor a natural choice for low-cost and high-efficiency applications

Freescale Semiconductor, Inc.

For More Information On This Product,
Go to: www.freescale.com

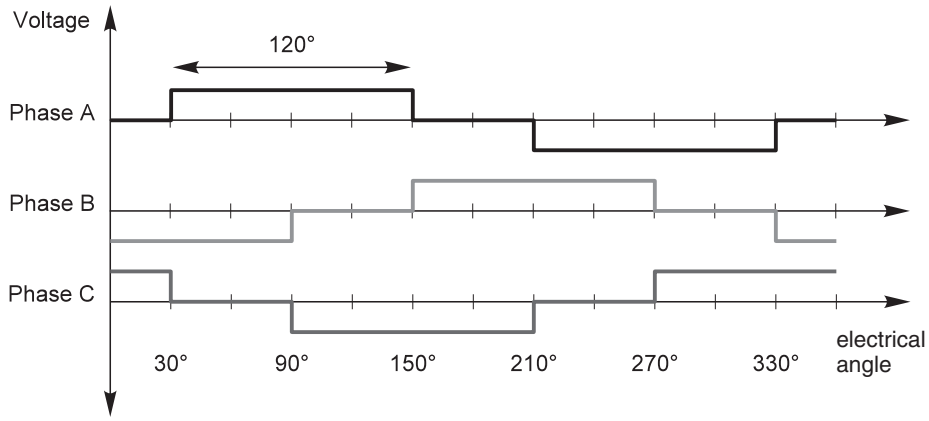

Figure 3-2. Three Phase Voltage System

Figure 3-3 shows number of waveforms: the magnetic flux linkage, the phase Back-EMF voltage and the phase-to-phase Back-EMF voltage. The magnetic flux linkage can be measured; however in this case it was calculated by integrating the phase Back-EMF voltage, which was measured on the non-fed motor terminals of the BLDC motor. As can be seen, the shape of the Back-EMF is approximately trapezoidal and the amplitude is a function of the actual speed. During the speed reversal the amplitude is changed its sign and the phase sequence change too.

The filled areas in the tops of the phase Back-EMF voltage waveforms indicate the intervals where the particular phase power stage commutations occur. As can be seen, the power switches are cyclically commutated through the six steps. The crossing points of the phase Back-EMF voltages represent the natural commutation points. In normal operation the commutation is performed here. Some control techniques advance the commutation by a defined angle in order to control the drive above the PWM voltage control

Freescale Semiconductor, Inc.

For More Information On This Product,
Go to: www.freescale.com

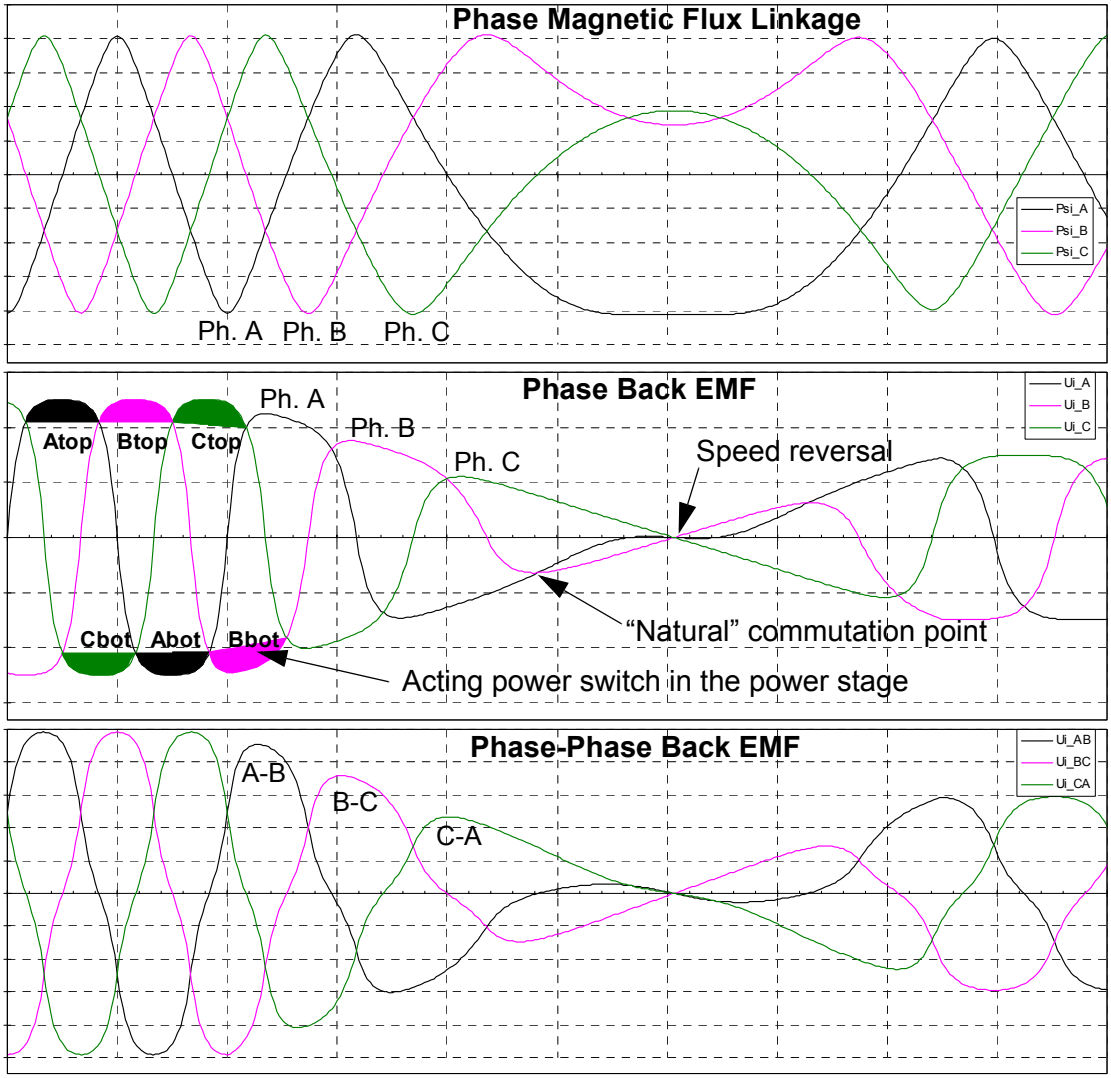

Figure 3-3. BLDC Motor - Back EMF and Magnetic Flux

3.2.2 3-Phase BLDC Power Stage

The voltage for 3-phase BLDC motor is provided by a 3-phase power stage controlled by a DSP. The PWM module is usually implemented on a DSP to create desired control signals.

A DSP with BLDC motor and power stage is shown in **Figure 3-3**.

For More Information On This Product,
Go to: www.freescale.com

Freescale Semiconductor, Inc.

3.2.3 Why Sensorless Control?

As explained in the previous section, the rotor position must be known in order to drive a Brushless DC motor. If any sensors are used to detect rotor position, then sensed information must be transferred to a control unit (see **Figure 3-4**).

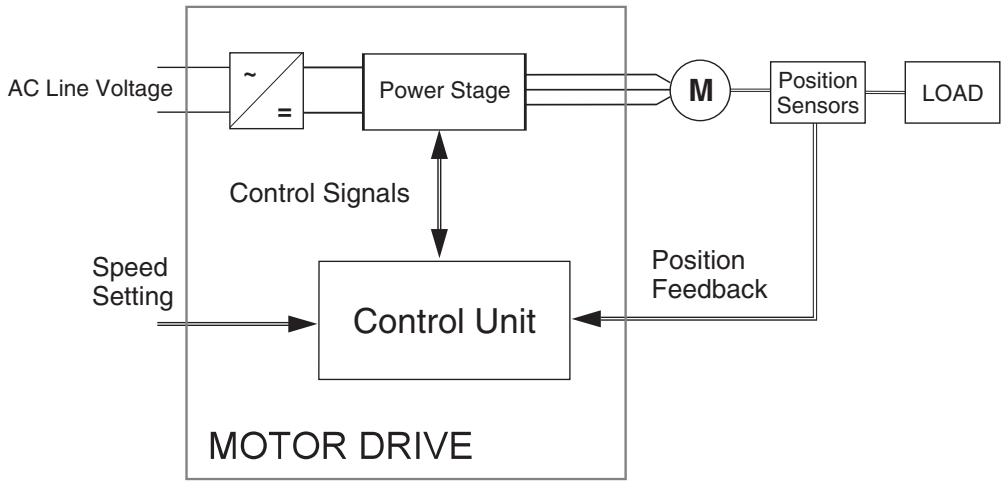

Figure 3-4. Classical System

Therefore additional connections to the motor are necessary. This may not be acceptable for some applications (see **1.3 Benefits of the Solution**).

For additional BLDC control information, refer also to AN1627 (**Appendix A. References, 8**).

3.2.4 Power Stage - Motor System Model

In order to explain and simulate the idea of Back-EMF sensing techniques, a simplified mathematical model based on the basic circuit topology (see **Figure 3-5**) is provided.

For More Information On This Product,
Go to: www.freescale.com
Freescale Semiconductor, Inc.

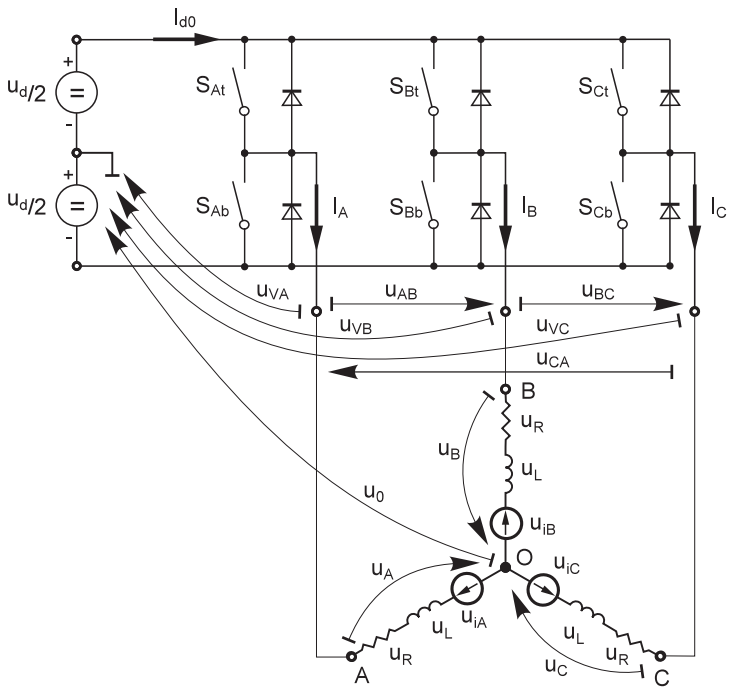

Figure 3-5. Power Stage - Motor Topology

The second goal of the model is to find how the motor characteristics depend on the switching angle. The **switching angle** is the angular difference between a real switching event and an ideal one (at the point where the **phase to phase** Back-EMF crosses zero).

The motor-drive model consists of a normal three phase power stage plus a Brushless DC motor. The power for the system is provided by a voltage source (U_d). Six semiconductor switches ($S_{A/B/C\ t/b}$), controlled elsewhere, allow the rectangular voltage waveforms (see **Figure 3-2**) to be applied. The semiconductor switches and diodes are simulated as ideal devices. The natural voltage level of the whole model is put at one half of the dc-bus voltage. This simplifies the mathematical expressions.

Freescale Semiconductor, Inc.

For More Information On This Product,
Go to: www.freescale.com

3.2.4.1 Mathematical Model

The following set of equations is valid for the presented topology:

$$
\begin{aligned}
u_A &= \frac{1}{3}\left(2u_{VA} - u_{VB} - u_{VC} + \sum_{x=A}^{C} u_{ix}\right) \\
u_B &= \frac{1}{3}\left(2u_{VB} - u_{VC} - u_{VA} + \sum_{x=A}^{C} u_{ix}\right) \\
u_C &= \frac{1}{3}\left(2u_{VC} - u_{VA} - u_{VB} + \sum_{x=A}^{C} u_{ix}\right) \\
u_O &= \frac{1}{3}\left(\sum_{x=A}^{C} u_{Vx} - \sum_{x=A}^{C} u_{ix}\right) \\
0 &= i_A + i_B + i_C
\end{aligned}
\qquad \textbf{(EQ 3-1.)}
$$

where:

$u_{VA} \ldots u_{VC}$ are “branch” voltages; the voltages between one power stage output and its virtual zero.

$u_A \ldots u_C$ are motor phase winding voltages.

$u_{iA} \ldots u_{iC}$ are phase Back-EMF voltages induced in the stator winding.

u_C is the voltage between the central point of the star of motor winding and the power stage natural zero

$i_A \ldots i_C$ are phase currents

The equations **(EQ 3-1.)** can be written taking into account the motor phase resistance and the inductance. The mutual inductance between

For More Information On This Product,
Go to: www.freescale.com

Freescale Semiconductor, Inc.

the two motor phase windings can be neglected because it is very small and has no significant effect for our abstraction level.

$$
\begin{aligned}
u_{VA} - u_{iA} - \frac{1}{3}\left(\sum_{x=A}^{C} u_{Vx} - \sum_{x=A}^{C} u_{ix}\right) &= R \cdot i_A + L\frac{di_A}{dt} \\
u_{VB} - u_{iB} - \frac{1}{3}\left(\sum_{x=A}^{C} u_{Vx} - \sum_{x=A}^{C} u_{ix}\right) &= R \cdot i_B + L\frac{di_B}{dt} \\
u_{VC} - u_{iC} - \frac{1}{3}\left(\sum_{x=A}^{C} u_{Vx} - \sum_{x=A}^{C} u_{ix}\right) &= R \cdot i_C + L\frac{di_C}{dt}
\end{aligned}
\qquad \textbf{(EQ 3-2.)}
$$

where:

R,L **motor phase resistance, inductance**

The internal torque of the motor itself is defined as:

$$
T_i = \frac{1}{\omega}\sum_{x=A}^{C} u_{ix} \cdot i_x = \sum_{x=A}^{C} \frac{d\Psi_x}{d\theta} \cdot i_x \qquad \textbf{(EQ 3-3.)}
$$

where:

T_i internal motor torque (no mechanical losses)

ω,θ motor speed, rotor position

x phase index, it stands for A,B,C

Ψ_x magnetic flux of phase winding *x*

It is important to understand how the Back-EMF can be sensed and how the motor behavior depends on the alignment of the Back-EMF to commutation events. This is explained in the next sections.

3.2.5 Back-EMF Sensing

The Back-EMF sensing technique is based on the fact that only two phases of a DC Brushless motor are connected at a time (see

For More Information On This Product,
Go to: www.freescale.com

Freescale Semiconductor, Inc.

Figure 3-2), so the third phase can be used to sense the Back-EMF voltage.

Let us assume the situation when phases A and B are powered and phase C is non-fed. No current is going through this phase. This is described by the following conditions:

$$\begin{gathered} S_{Ab}, S_{Bt} \leftarrow \text{are energized} \\ u_{VA} = \mp\frac{1}{2}u_d, u_{VB} = \pm\frac{1}{2}u_d \\ i_A = -i_B, i_C = 0, di_C = 0 \\ u_{iA} + u_{iB} + u_{iC} = 0 \end{gathered} \quad \textbf{(EQ 3-4.)}$$

The branch voltage C can be calculated when considering the above conditions:

$$u_{VC} = \frac{3}{2}u_{iC} \quad \textbf{(EQ 3-5.)}$$

AS shown in Figure 3-5, the branch voltage of phase C can be sensed between the power stage output C and the zero voltage level. Thus the Back-EMF voltage is obtained and the zero crossing can be recognized.

The general expressions can also be found:

$$u_{Vx} = \frac{3}{2}u_{ix} \text{where } x = A,B,C \quad \textbf{(EQ 3-6.)}$$

There are two necessary conditions which must be met:

- Top and bottom switch (in diagonal) have to be driven with the same PWM signal
- No current is going through the non-fed phase used to sense the Back-EMF

The Figure 3-6 shows branch and motor phase winding voltages during a 0-360°electrical interval. Shaded rectangles designate the validity of the equation (EQ 3-6.). In other words, the Back-EMF voltage can be sensed during designated intervals

For More Information On This Product,
Go to: www.freescale.com
Freescale Semiconductor, Inc.

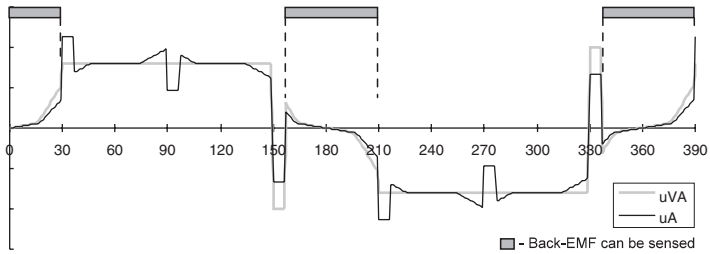

Figure 3-6. Phase Voltage Waveforms

However simple this solution looks, in reality it is more difficult, because the sensed “branch” voltage also contains some ripples.

3.2.5.1 Effect of Mutual Inductance

As shown in previous equations **(EQ 3-4.)** through **(EQ 3-6.)**, the mutual inductances play an important role here. The difference of the mutual inductances between the coils which carry the phase current, and the coil used for back-EMF sensing, causes the PWM pulses to be superimposed onto the detected back-EMF voltage. In fact, it is produced by the high rate of change of phase current, transferred to the free phase through the coupling of the mutual inductance.

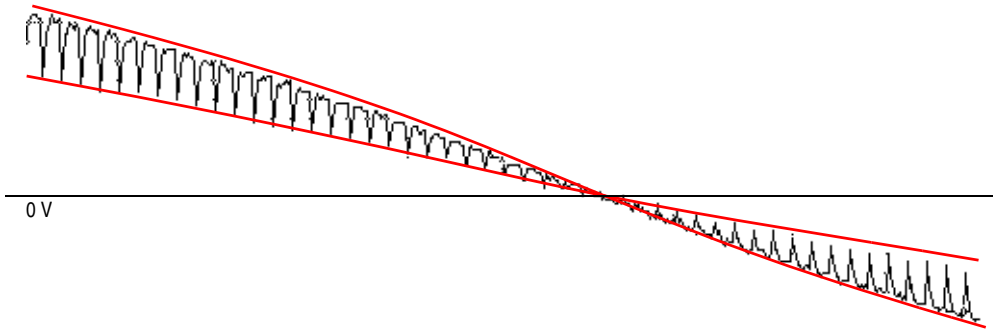

Figure 3-7. Mutual Inductance Effect

For More Information On This Product,
Go to: www.freescale.com
Freescale Semiconductor, Inc.

Figure 3-7 shows the real measured “branch” voltage. The red curves highlight the effect of the difference in the mutual inductances. This difference is not constant.

Due to the construction of the BLDC motor, both mutual inductances vary. They are equal at the position that corresponds to the back-EMF zero crossing detection.

The branch waveform detail is shown in Figure 3-8. Channel 1 in Figure 3-8 shows the disturbed “branch” voltage. The superimposed ripples clearly match the width of the PWM pulses, and thus prove the conclusions from the theoretical analysis.

The effect of the mutual inductance corresponds well in observations carried out on the five different BLDC motors. These observations were made during the development of the sensorless technique.

NOTE: *The BLDC motor with stator windings distributed in the slots has technically higher mutual inductances than other types. Therefore, this effect is more significant. On the other hand the BLDC motor with windings wounded on separate poles, shows minor presence of the effect of mutual inductance.*

CAUTION: *However noticeable this effect, it does not degrade the back-EMF zero crossing detection because it is cancelled at the zero crossing point. Simple additional filtering helps to reduce ripples further.*

Freescale Semiconductor, Inc.

For More Information On This Product,
Go to: www.freescale.com

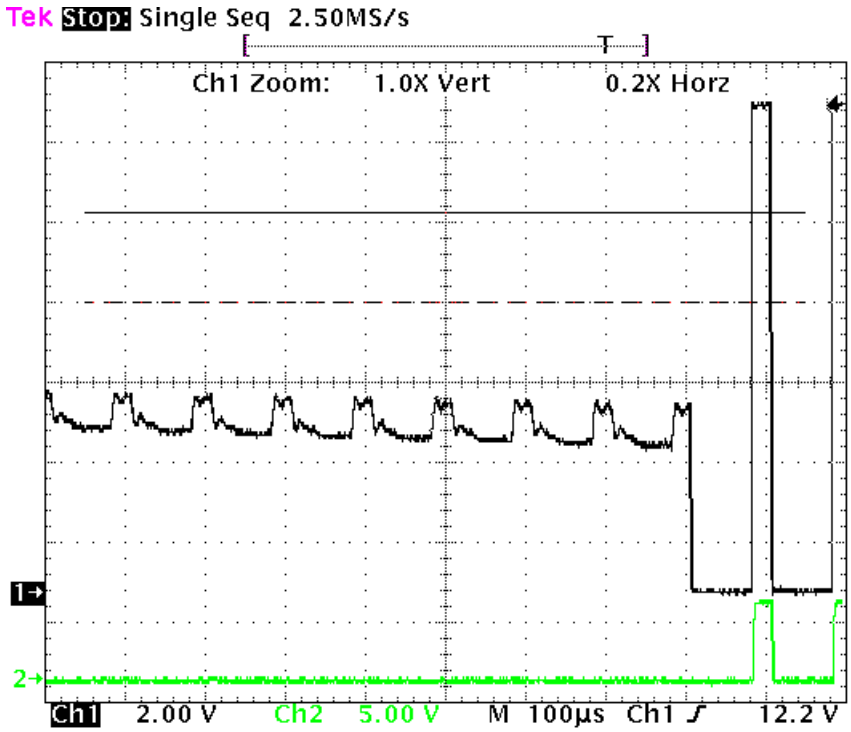

Figure 3-8. Detail of Mutual Inductance Effect

3.2.5.2 Effect of Mutual Phase Capacitance

The negative effect of mutual inductance is not the only one to disturb the back-EMF sensing. So far, the mutual capacitance of the motor phase windings was neglected in the motor model, since it affects neither the phase currents nor the generated torque. Usually the mutual capacitance is very small. Its influence is only significant during PWM switching, when the system experiences very high du/dt.

The effect of the mutual capacitance can be studied using the model shown in **Figure 3-9**.

For More Information On This Product,
Go to: www.freescale.com
Freescale Semiconductor, Inc.

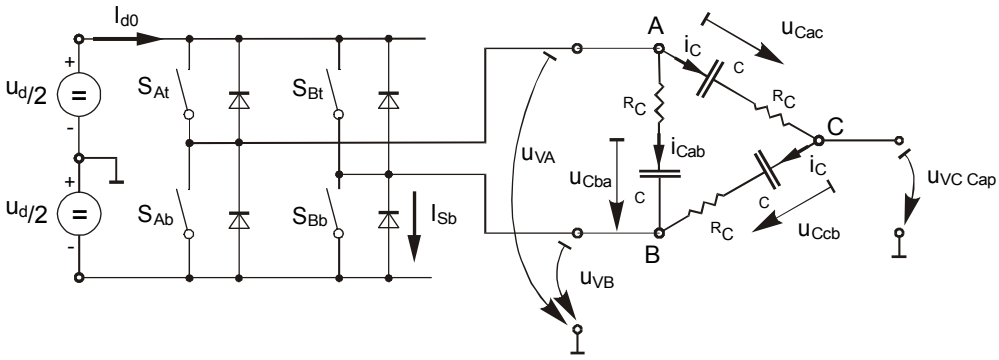

Figure 3-9. Mutual Capacitance Model

Let us focus on the situation when the motor phase A is switched from negative dc-bus rail to positive, and the phase B is switched from positive to negative. This is described by these conditions **(EQ 3-7.)**:

$$S_{Ab}, S_{Bt} \leftarrow PWM$$
$$u_{VA} = -\frac{1}{2}u_d \rightarrow \frac{1}{2}u_d,\ u_{VB} = \frac{1}{2}u_d \rightarrow -\frac{1}{2}u_d \qquad \textbf{(EQ 3-7.)}$$
$$i_{Cac} = i_{Ccb} = i_C$$

The voltage that disturbs the back-EMF sensing, utilizing the free (not powered) motor phase C, can be calculated based the equation:

$$u_{VC\ Cap} = \frac{1}{2}(u_{Ccb} + u_{Cac} + 2R_C) - (u_{Ccb} + R_C) = \frac{1}{2}(u_{Cac} - u_{Ccb}) \qquad \textbf{(EQ 3-8.)}$$

The final expression for disturbing voltage can be found as follows:

$$u_{VC\ Cap} = \frac{1}{2}\left(\frac{1}{C_{ac}} - \frac{1}{C_{cb}}\right)\int i_C\,dt = \frac{1}{2}\left(\frac{C_{cb} - C_{ac}}{C_{cb} \cdot C_{ac}}\right)\int i_C\,dt \qquad \textbf{(EQ 3-9.)}$$

NOTE: *(EQ 3-9.) expresses the fact that only the unbalance of the mutual capacitance (not the capacitance itself) disturbs the back-EMF sensing. When both capacities are equal (they are balanced), the disturbances disappear. This is demonstrated in **Figure 3-10** and **Figure 3-11**.*

For More Information On This Product,
Go to: www.freescale.com
Freescale Semiconductor, Inc.

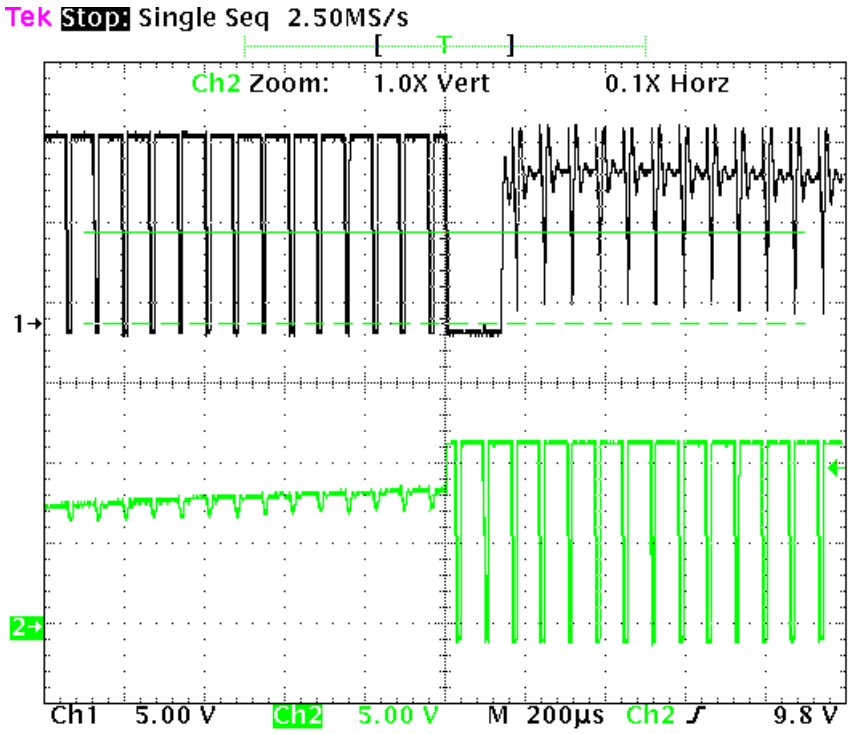

Figure 3-10. Distributed Back-EMF by Unbalanced Capacity Coupling

Channel 1 in **Figure 3-11** shows the disturbed “branch” voltage, while the other phase (channel 2) is not affected because it faces balanced mutual capacitance. The unbalance was purposely made by adding a small capacitor on the motor terminals, in order to better demonstrate the effect. After the unbalance was removed the “branch” voltage is clean, without any spikes.

Freescale Semiconductor, Inc.

For More Information On This Product,
Go to: www.freescale.com

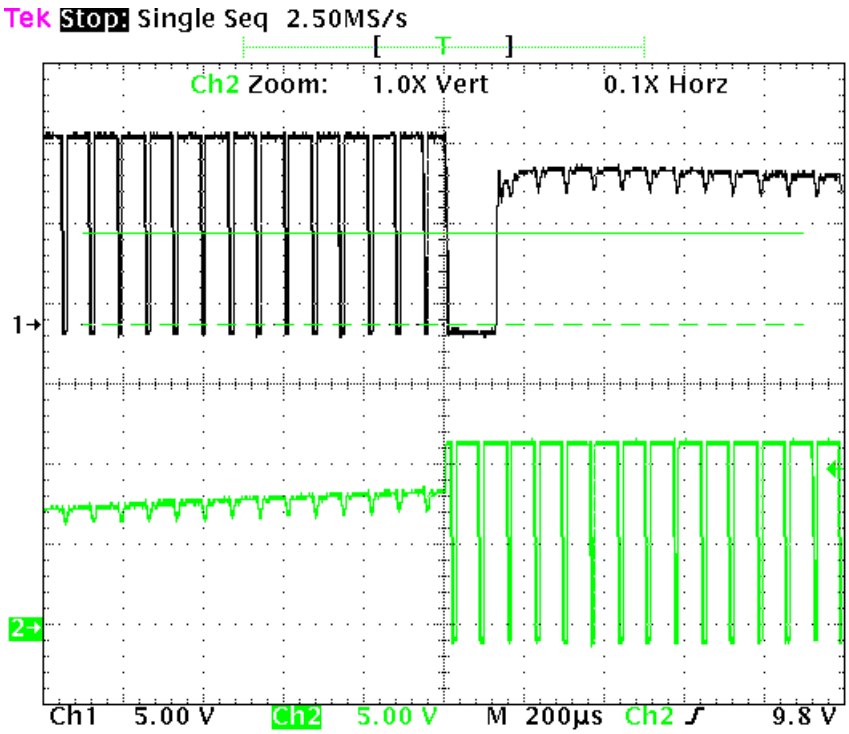

Figure 3-11. Balanced Capacity Coupling

NOTE: *The configuration of the phase windings end-turns has significant impact; therefore, it needs to be properly managed to preserve the balance in the mutual capacity. This is important, especially for prototype motors that are usually hand-wound.*

CAUTION: *Failing to maintain balance in the mutual capacitance can easily disqualify such a motor from using sensorless techniques based on the back-EMF sensing. Usually, the BLDC motors with windings wound on separate poles show minor presence of the mutual capacitance. Thus, the disturbance is also insignificant.*

Freescale Semiconductor, Inc.

For More Information On This Product,
Go to: www.freescale.com

3.3 Control Technique

3.3.1 Control Technique - General Overview

The general overview of used control technique is shown in **Figure 2-1**. It will be described in following subsections:

- PWM voltage generation for BLDC
- Back-EMF Zero Crossing sensing
- Sensorless Commutation Control
- Speed Control

The implementation of the control technique with all the software processes is shown in Flow Chart, State diagrams and Data Flow (see **Figure 5-1** through **Figure 5-13**).

Freescale Semiconductor, Inc.

For More Information On This Product,
Go to: www.freescale.com

3.3.2 PWM voltage Generation for BLDC.

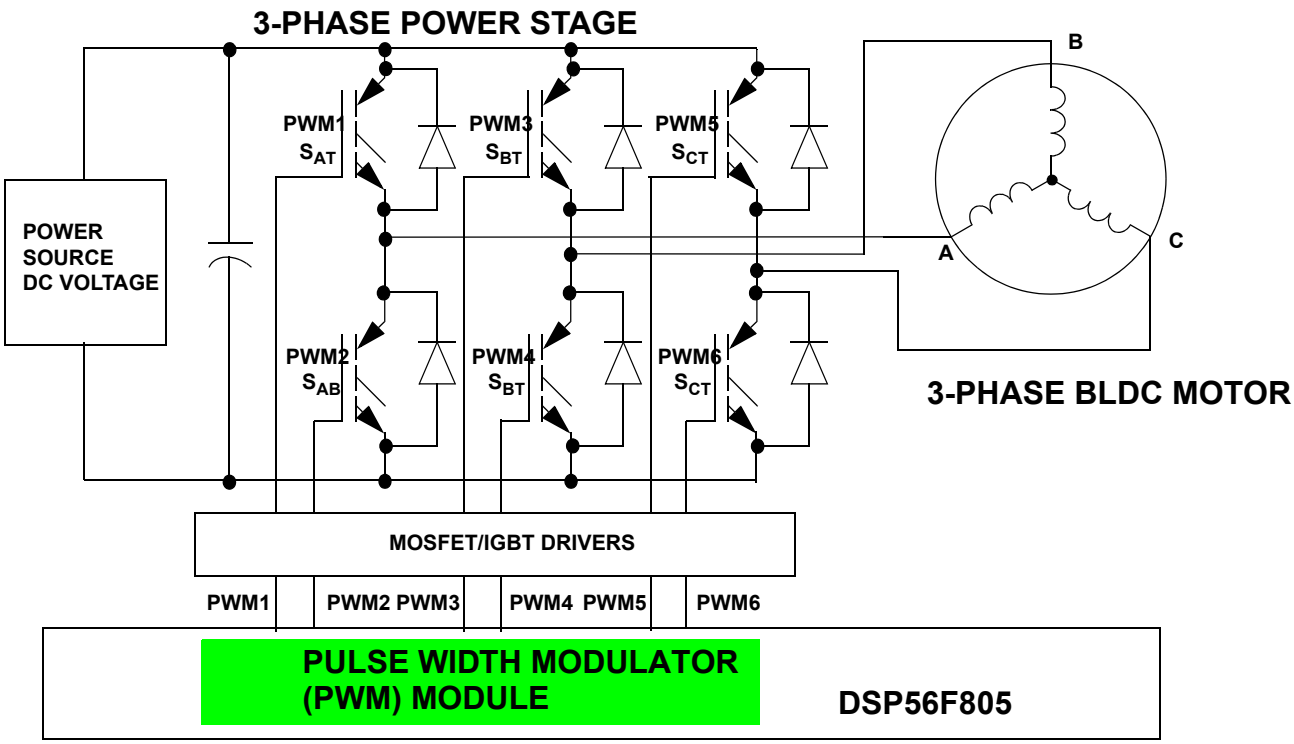

Figure 3-12. PWM with BLDC Power Stage

As was already explained, the three phase voltage system shown in **Figure 3-2** needs to be created to run the BLDC motor. It is provided by 3-phase power stage with 6 IGBTs (MOSFET) controlled by the on-chip PWM module (see **Figure 3-12**). The PWM signals with state currents are shown in **Figure 3-13** and **Figure 3-14**.

For More Information On This Product,
Go to: www.freescale.com

Freescale Semiconductor, Inc.

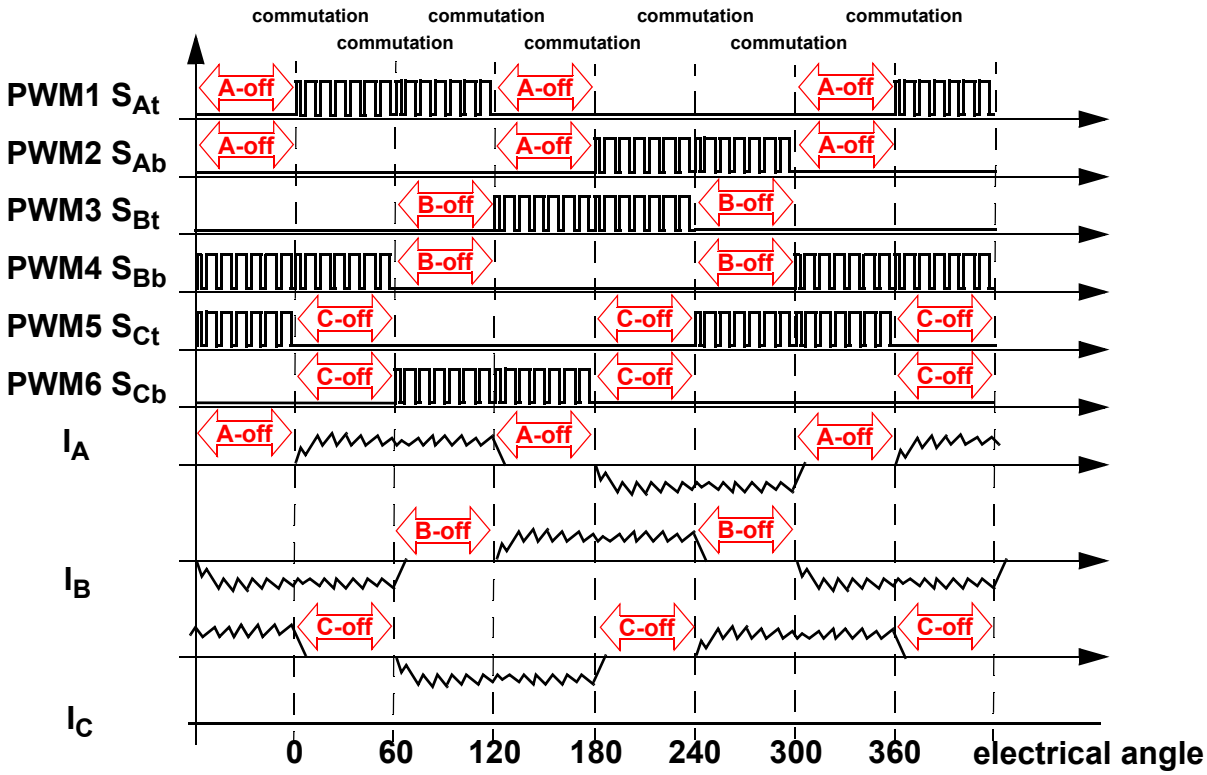

Figure 3-13. 3-phase BLDC Motor Commutation PWM Signal

Figure 3-13 shows that both Bottom and Top power switches of the “free“ phase must be switched off. This is needed for any effective control of Brushless DC motor with trapezoidal BEMF

Freescale Semiconductor, Inc.

For More Information On This Product,
Go to: www.freescale.com

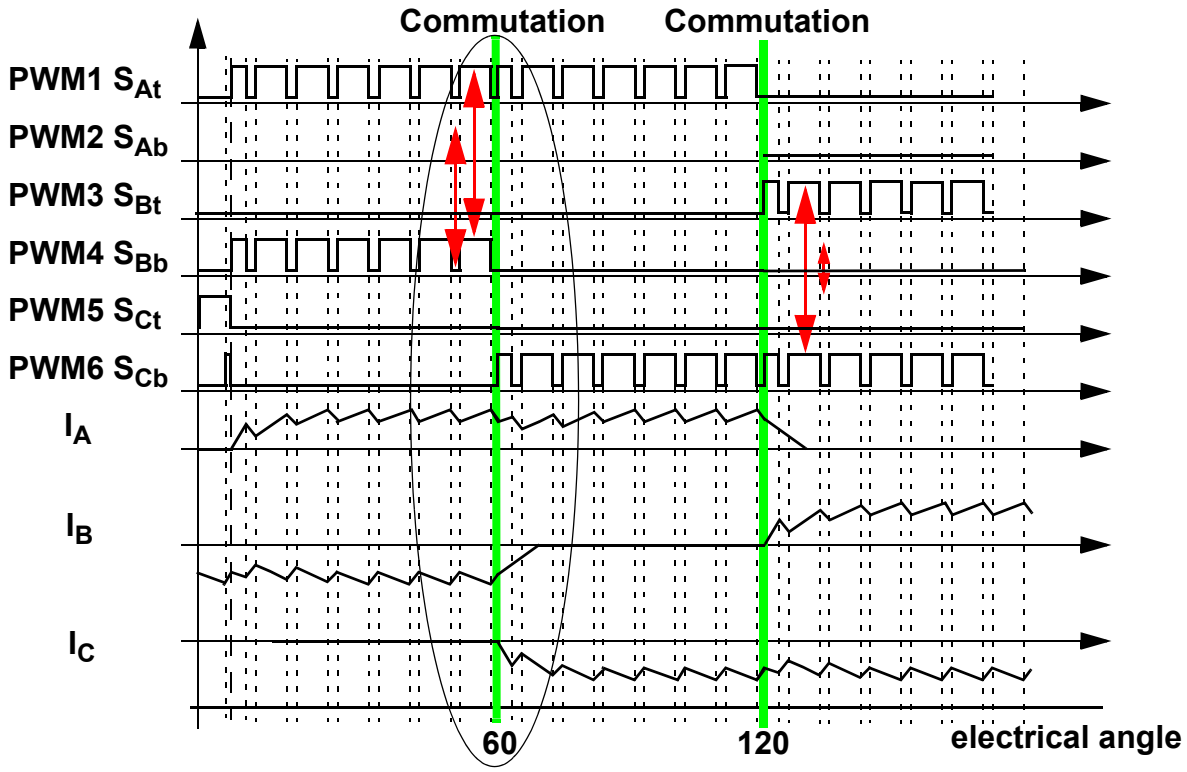

Figure 3-14. BLDC Commutation with Bipolar (Hard) Switching

Figure 3-14 shows that the diagonal power switches are driven by the same PWM signal as shown with arrow lines. This technique is called bipolar (hard) switching. The voltage across the two connected coils is always ±dc-bus voltage whenever there is a current flowing through these coils. Thus the condition for successful BEMF Zero Crossing sensing is fulfilled as described in **3.2 Brushless DC Motor Control Theory**.

Freescale Semiconductor, Inc.

For More Information On This Product,
Go to: www.freescale.com

3.3.3 BEMF Zero Crossing Sensing

3.3.3.1 A/D Convertor Used for Back-EMF Zero Crossing

The Back-EMF Zero Crossing is detected by sensing the motor non-fed phase “branch“ voltage (u_{vi} in **3.2.5 Back-EMF Sensing**) and dc-bus voltage u_d utilizing the ADC. (Refer to **3.2 Brushless DC Motor Control Theory**).

The Motorola DSP56F80x family offers an excellent on-chip Analog-to-Digital converter. Its unique feature set provides an automatic detection of the signal crossing the value contained in the ADC offset register.

Then the Back-EMF Zero Crossing can be split into two main tasks:

- ADC Zero Crossing Checking
- ADC Zero Crossing Offset Setting to follow the variation of the dc-bus voltage

3.3.3.2 ADC Zero Crossing Checking

The Zero Crossing for position estimation is sensed using the A/D convertor.

As stated, the A/D convertor has individual ADC Offset Registers for each ADC channels. The value in the Offset Register can be subtracted from the A/D conversion output. The final result of the A/D conversion is then two’s compliment data. The other feature associated to the Offset Registers is the Zero Crossing interrupt. The Zero Crossing interrupt is asserted whenever the ADC conversion result changes the sign compared to the previous conversion result. Refer to the manual for detailed information.

This application utilizes ADC Zero Crossing Interrupt to get the Back-EMF Zero Crossing event.

Freescale Semiconductor, Inc.

For More Information On This Product,
Go to: www.freescale.com

3.3.3.3 ADC Zero Crossing Offset Setting

As explained in the previous section, the ADC Offset Register is set to one half of the dc-bus value. This is valid at the following conditions:

- Motor phases are symmetrical (all 3-phases have same parameters)
- hardware dividers for the ADC of the dc-bus and all 3-phase voltages, have equal ratio

The ADC Offset Register needs to be continuously updated, to reflect the dc-bus voltage variation caused by the ripple of dc-bus voltage.

The above mentioned conditions are not 100% fulfilled in real drive due to the unbalance in real sensing circuitry and the motor phases. Therefore, the real application must compensate such unbalance.

The presented application first sets the ADC Offset Registers[0..3] of all 3-phases to:

- ADC Offset Register[0..3] = Calibration Phase Voltage Coefficient * dc-bus

Where the Calibration Phase Voltage Coefficient is set to 0.5. Later during the Alignment state the Calibration Phase Voltage Coefficient is further corrected. The dc-bus and non-fed phase branch voltage are measured and the correction is calculated according to the following formula:

Calibration Phase Voltage Coefficient = (ADC Offset Register + Free Phase Branch Voltage)/dc-bus voltage

3.3.3.4 BEMF Zero Crossing Synchronization with PWM

The power stage PWM switching causes the high voltage transient of the phase voltages. This transient is passed to “free” phase due to mutual capacitor between the motor windings coupling. **Figure 3-15** shows that free phase “branch” voltage U_{va} is disturbed by PWM voltage shown on phase “branch” voltage U_{vb}.

For More Information On This Product,
Go to: www.freescale.com

Freescale Semiconductor, Inc.

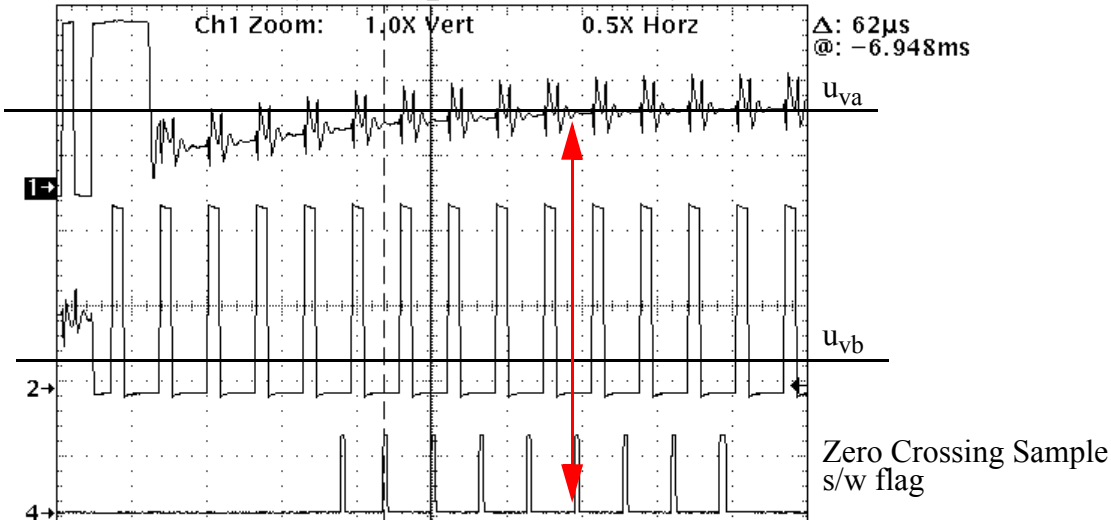

Figure 3-15. BEMF Zero Crossing Synchronization with PWM

The non-fed phase “branch” voltage U_{va} is disturbed at the PWM switching edges. Therefore the presented BLDC Motor Control application synchronizes the Back-EMF Zero Crossing detection with PWM. The A/D conversion of phase branch voltages is triggered in the middle of PWM pulse. Then the voltage for Back-EMF is sensed at the time moments because the non-fed phase branch voltage is already stabilized.

3.3.4 Sensorless Commutation Control

This section presents sensorless BLDC motor commutation with the Back-EMF Zero Crossing technique.

In order to start and run the BLDC motor, the control algorithm has to go through the following states::

- Alignment
- Starting (Back-EMF Acquisition)
- Running

Figure 3-16 shows the transitions between the states. First the rotor is aligned to a known position; then the rotation is started without the

For More Information On This Product,
Go to: www.freescale.com
Freescale Semiconductor, Inc.

position feedback. When the rotor moves, the Back-EMF is acquired so the position is known and can be used to calculate the speed and processing of the commutation in the Running state.

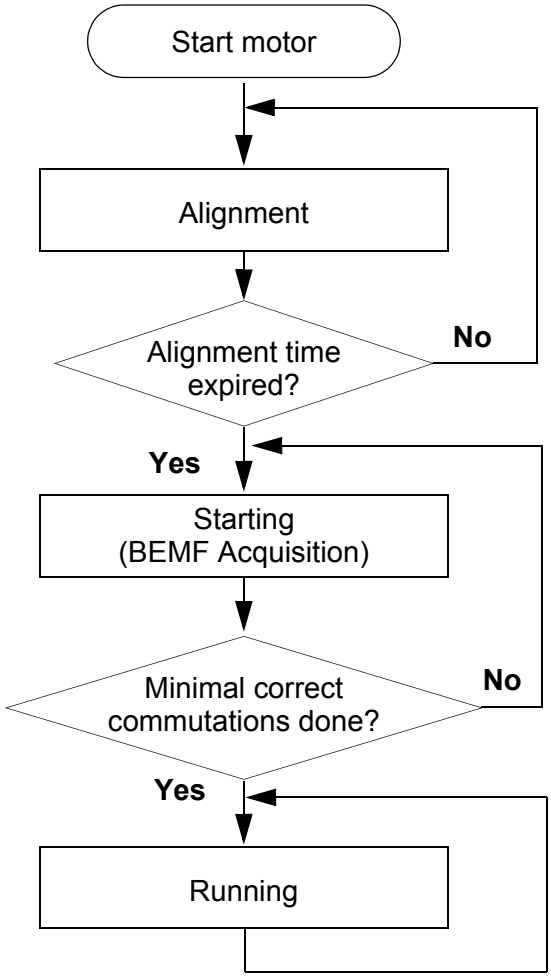

Figure 3-16. Commutation Control Stages

3.3.4.1 Alignment

Before the motor starts, there is a short time (which depends on the motor's electrical time constant) when the rotor position is stabilized by applying PWM signals to only two motor phases (no commutation). The Current Controller keeps the current within predefined limits. This state

For More Information On This Product,
Go to: www.freescale.com

Freescale Semiconductor, Inc.

is necessary in order to create a high start-up torque. When the preset time-out expires then this state is finished.

- The Current Controller subroutine with PI regulator is called to control dc-bus current. It sets the correct PWM ratio for the required current.

The current PI controller works with constant execution (sampling) period determined by PWM frequency: Current Controller period = 1/PWM frequency.

The BLDC motor rotor position with flux vectors during alignment is shown in **Figure 3-17**.

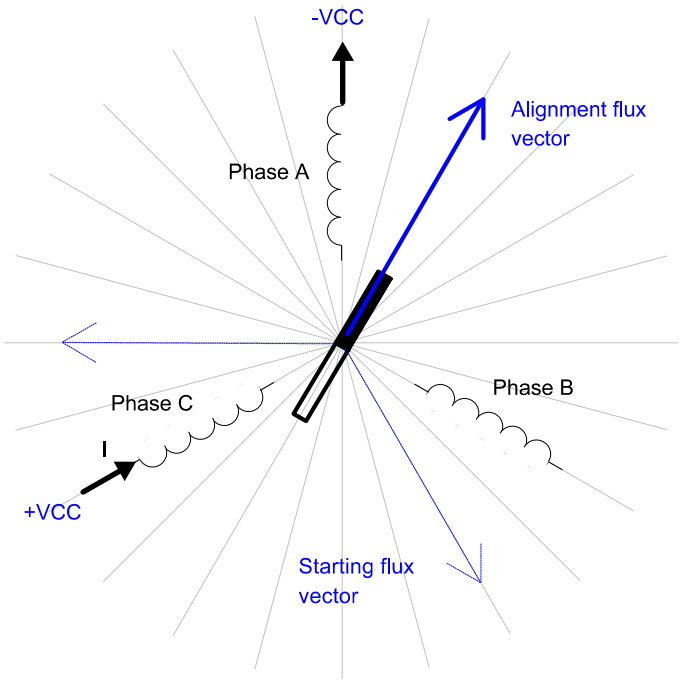

Figure 3-17. Alignment

3.3.4.2 Running

The commutation process is the series of states which assure that the Back-EMF zero crossing is successfully captured, the new commutation

For More Information On This Product,
Go to: www.freescale.com
Freescale Semiconductor, Inc.

time is calculated and, finally, the commutation is performed. The following processes needs to be provided:

- BLDC motor commutation service
- Back-EMF Zero Crossing moment capture service
- Computation of commutation times
- Handler for interaction between these commutation processes

3.3.4.3 Algorithms BLDC Motor Commutation with Zero Crossing Sensing

All these processes are provided by new algorithms which were designed for these type of applications. They are described in **Section 6. Software Algorithms**.

Diagrams aid in explaining how the commutation works. After commuting the motor phases, a time interval (Per_Toff[n]) is set that allows the shape of the Back-EMF to be stabilized. Stabilization is required because the electro-magnetic interference and fly-back current in antibody diode can generate glitches that may add to the Back-EMF signal. This can cause a misinterpretation of Back-EMF Zero Crossing. Then the new commutation time (T2[n]) is preset and performed at this time if the Back-EMF Zero Crossing is not captured. If the Back-EMF Zero Crossing is captured before the preset commutation time expires, then the exact calculation of the commutation time (T2*[n]) is made based on the captured Zero Crossing time (T_ZCros[n]). The new commutation is performed at this new time.

If (for any reason) the Back-EMF feedback is lost within one commutation period, corrective action is taken to return regular states.

The flow chart explaining the principle of BLDC CommutationControl with BEMF Zero Crossing Sensing is shown in **Figure 3-18**.

Freescale Semiconductor, Inc.

For More Information On This Product,
Go to: www.freescale.com

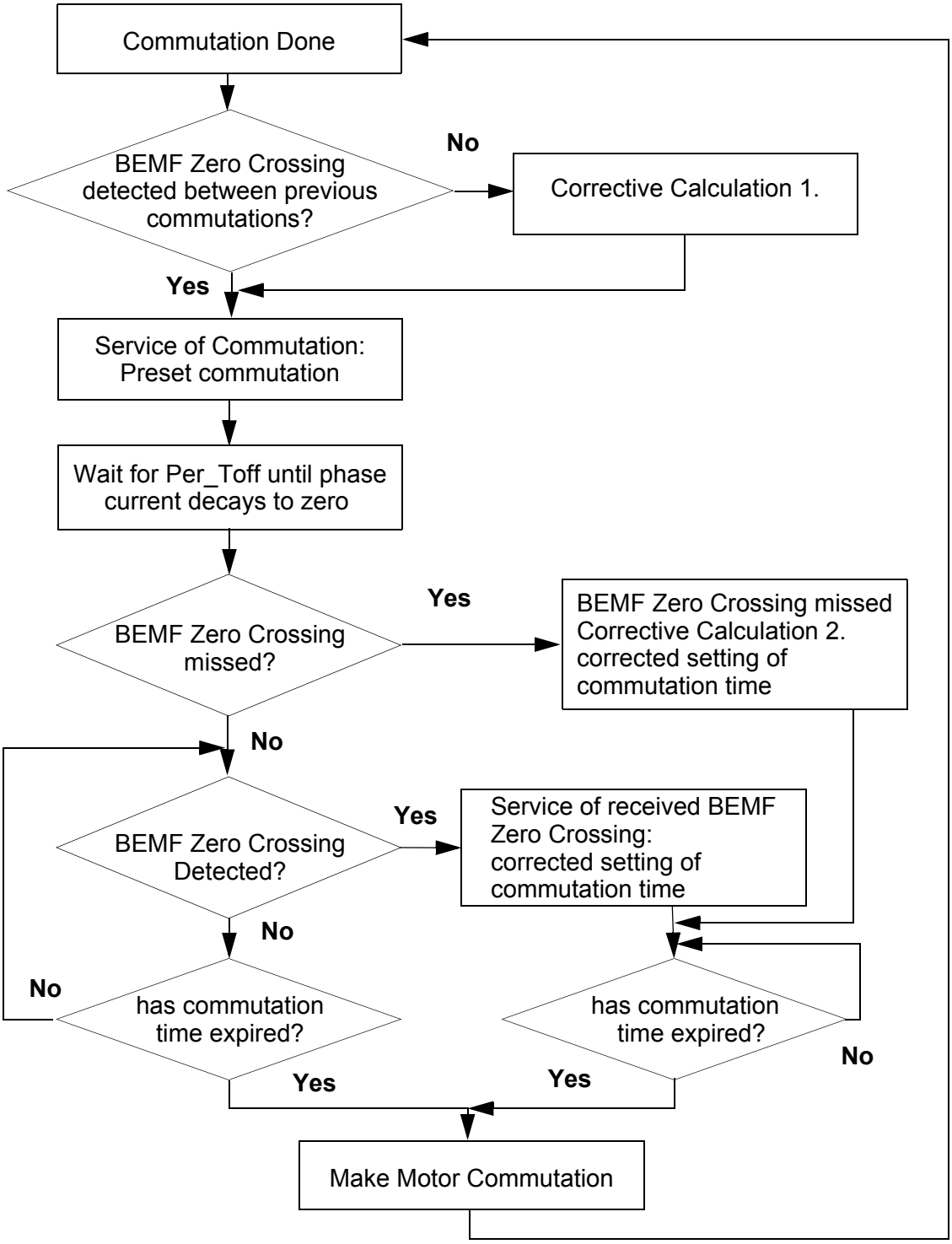

Figure 3-18. Flow Chart - BLDC Commutation with BEMF Zero Crossing Sensing

For More Information On This Product,
Go to: www.freescale.com
Freescale Semiconductor, Inc.

3.3.4.4 Running - Commutation Times Calculation

Commutation time calculation is provided by algorithm **bldcZCComput** described in **Section 6. Software Algorithms**.

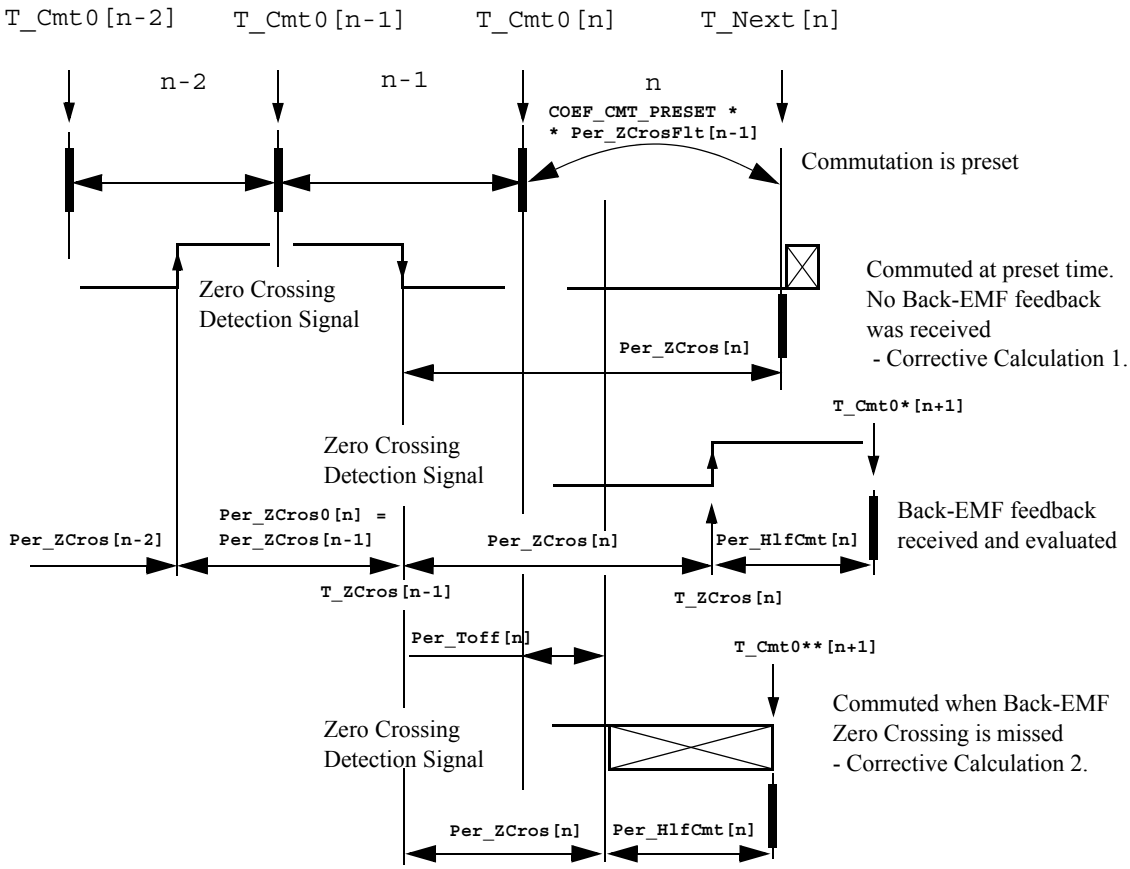

Figure 3-19. BLDC Commutation Times with Zero Crossing sensing

The following calculations are made to calculate the commutation times (T_Next[n])

during the **Running Stage**:

- **Service of Commutation** - The commutation time (T_Next[n]) is predicted:

```
T_Next[n] = T_Cmt0[n] + Per_CmtPreset[n] =
        = T_Cmt0[n] + Coef_CmtPrecomp*Per_ZCrosFlt[n-1]
        coefficient Coef_CmtPrecomp = 2 at Running Stage!
```


For More Information On This Product,
Go to: www.freescale.com

Freescale Semiconductor, Inc.

```
If Coef_CmtPrecomp*Per_ZCrosFlt>Max_PerCmt
       then result is limited at Max_PerCmt
```

- **Service of received Back-EMF zero crossing** - The commutation time (T_Next*[n]) is evaluated from the captured Back-EMF zero crossing time (T_ZCros[n]):

```
Per_ZCros[n] = T_ZCros[n] - T_ZCros[n-1] = T_ZCros[n] - T_ZCros0
Per_ZCrosFlt[n] = (1/2*Per_ZCros[n]+1/2*Per_ZCros0)
HlfCmt[n] = 1/2*Per_ZCrosFlt[n]- Advance_angle =
          = 1/2*Per_ZCrosFlt[n]- C_CMT_ADVANCE*Per_ZCrosFlt[n]=
       Coef_HlfCmt*Per_ZCrosFlt[n]
       The best commutation was get with Advance_angle:
60Deg*1/8 = 7.5Deg
       which means Coef_HlfCmt = 0.375 at Running Stage!
Per_Toff[n+1] = Per_ZCrosFlt*Coef_Toff and Max_PerCmtProc
minimum
       Coef_Toff = 0.35 at Running Stage, Max_PerCmtProc = 100!
Per_ZCros0 <-- Per_ZCros[n]
T_ZCros0 <-- T_ZCros[n]
T_Next*[n] = T_ZCros[n] + HlfCmt[n]
```

- If no Back-EMF zero crossing was captured during preset commutation period (`Per_CmtPreset`[n]) then C**orrective Calculation 1.** is made:

```
T_ZCros[n] <-- CmtT[n+1]
Per_ZCros[n] = T_ZCros[n] - T_ZCros[n-1] = T_ZCros[n] - T_ZCros0
Per_ZCrosFlt[n] = (1/2*Per_ZCros[n]+1/2*Per_ZCros0)
HlfCmt[n] = 1/2*Per_ZCrosFlt[n]-Advance_angle =
Coef_HlfCmt*Per_ZCrosFlt[n]
       The best commutation was get with Advance_angle:
60Deg*1/8 = 7.5Deg
       which means Coef_HlfCmt = 0.375 at Running Stage!
Per_Toff[n+1] = Per_ZCrosFlt*Coef_Toff and
Max_PerCmtProc minimum
Per_ZCros0 <-- Per_ZCros[n]
T_ZCros0 <-- T_ZCros[n]
```

- If Back-EMF zero crossing is missed then **Corrective Calculation 2.** is made:

```
T_ZCros[n] <-- CmtT[n]+Toff[n]
Per_ZCros[n] = T_ZCros[n] - T_ZCros[n-1] = T_ZCros[n] - T_ZCros0
Per_ZCrosFlt[n] = (1/2*T_ZCros[n]+1/2*T_ZCros0)
HlfCmt[n] = 1/2*Per_ZCrosFlt[n]-Advance_angle =
Coef_HlfCmt*Per_ZCrosFlt[n]
       The best commutation was get with Advance_angle:
60Deg*1/8 = 7.5Deg
       which means Coef_HlfCmt = 0.375 at Running Stage!
```


For More Information On This Product,
Go to: www.freescale.com

Freescale Semiconductor, Inc.

```
Per_ZCros0 <-- Per_ZCros[n]
T_ZCros0 <-- T_ZCros[n]
```

- Where:

```
T_Cnt0 = time of the last commutation
T_Next = Time of the Next Time event (for Timer Setting)
T_zCros = Time of the last Zero Crossing
T_zCros0 = Time of the previous Zero Crossing
Per_Toff = Period of the Zero Crossing off
Per_CmtPreset = Preset Commutation Periof from commutation to
next commutation if no Zero Crossing was captured
Per_ZCros = Period between Zero Crossings (estimates required
commutation period)
Per_ZCros0 = Pervious period between Zero Crossings
Per_ZCrosFlt = Estimated period of commutation filtered
Per_HlfCmt = Period from Zero Crossing to commutation (half
commutation)
```

The required commutation timing is provided by setting of commutation constants **Coef_CmtPrecompFrac, Coef_CmtPrecompLShft, Coef_HlfCmt, Coef_Toff,** in structure **RunComputInit.**

3.3.4.5 Starting (Back-EMF Acquisition)

The Back-EMF sensing technique enables a sensorless detection of the rotor position, however the drive must be first started without this feedback. It is caused by the fact that the amplitude of the induced voltage is proportional to the motor speed. Hence, the Back-EMF cannot be sensed at a very low speed and a special start-up algorithm must be performed.

In order to start the BLDC motor the adequate torque must be generated. The motor torque is proportional to the multiplication of the stator magnetic flux, the rotor magnetic flux and the sine of angle between these magnetic fluxes.

It implies (for BLDC motors) the following:

1. The level of phase current must be high enough.
2. The angle between the stator and rotor magnetic fields must be 90deg±30deg.

For More Information On This Product,
Go to: www.freescale.com

Freescale Semiconductor, Inc.

The first condition is satisfied during the Alignment state by keeping the dc-bus current on the level which is sufficient to start the motor. In the Starting (Back-EMF Acquisition) state the same value of PWM duty cycle is used as the one which has stabilized the dc-bus current during the Align state.

The second condition is more difficult to fulfill without any position feedback information. After the Alignment state the stator and the rotor magnetic fields are aligned (0deg angle). Therefore the two fast (faster then the rotor can follow) commutations must be applied to create an angular difference of the magnetic fields (see **Figure 3-20**).

The commutation time is defined by start commutation period (**Per_CmtStart**) .

This allows starting the motor such that minimal speed (defined by state when Back-EMF can be sensed) is achieved during several commutations while producing the required torque. Until the Back-EMF feedback is locked the Commutation Process (explained in **3.3.4.2 Running**) assures that commutations are done in advance, so that successive Back-EMF zero crossing events are not missed.

After several successive Back-EMF zero crossings the exact commutation times can be calculated. The commutation process is adjusted and the control flow continues to the Running state. The BLDC motor is then running with regular feedback and the speed controller can be used to control the motor speed by changing the PWM duty cycle value.

Freescale Semiconductor, Inc.

For More Information On This Product,
Go to: www.freescale.com

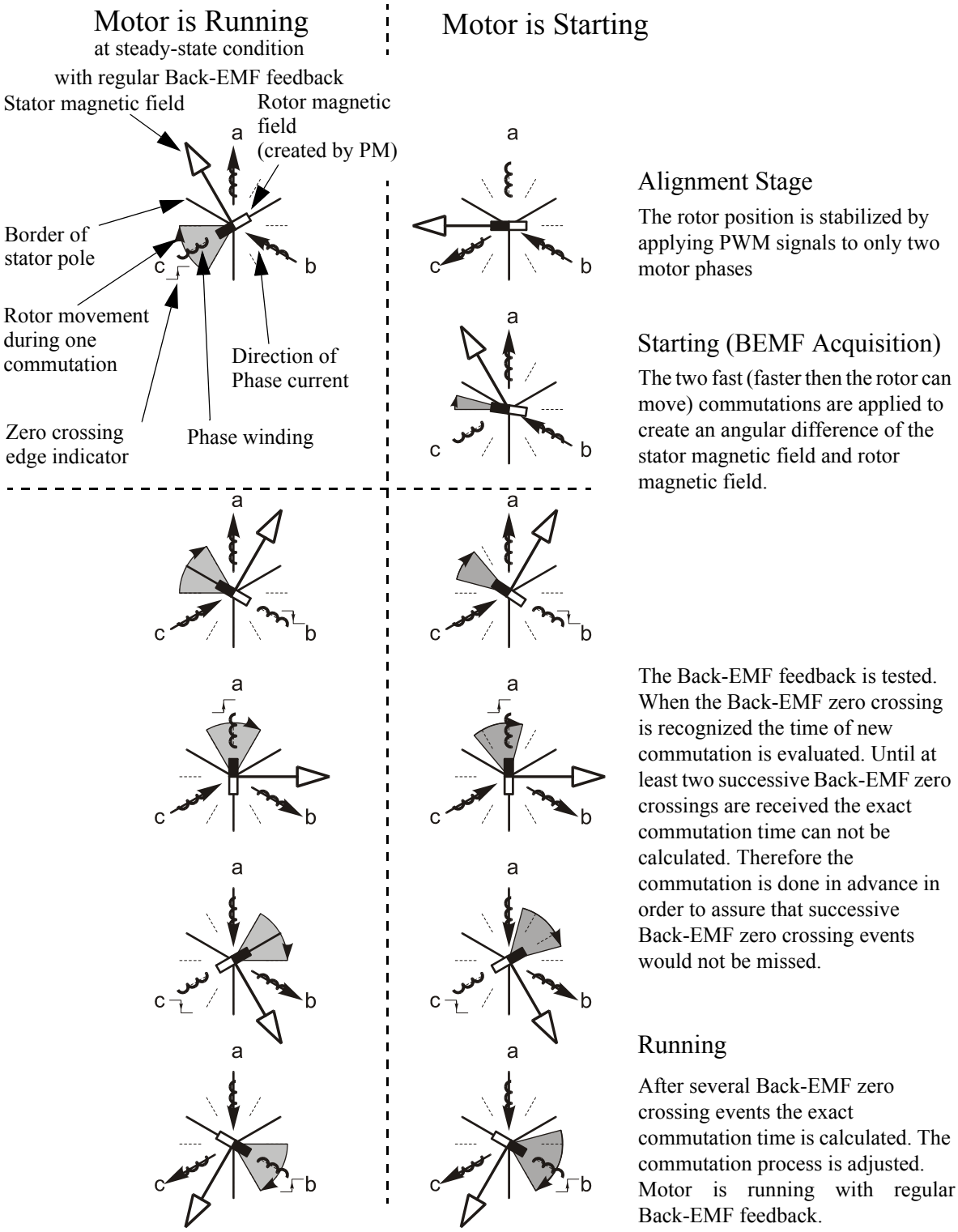

Figure 3-20. Vectors of Magnetic Fields

For More Information On This Product,
Go to: www.freescale.com

Freescale Semiconductor, Inc.

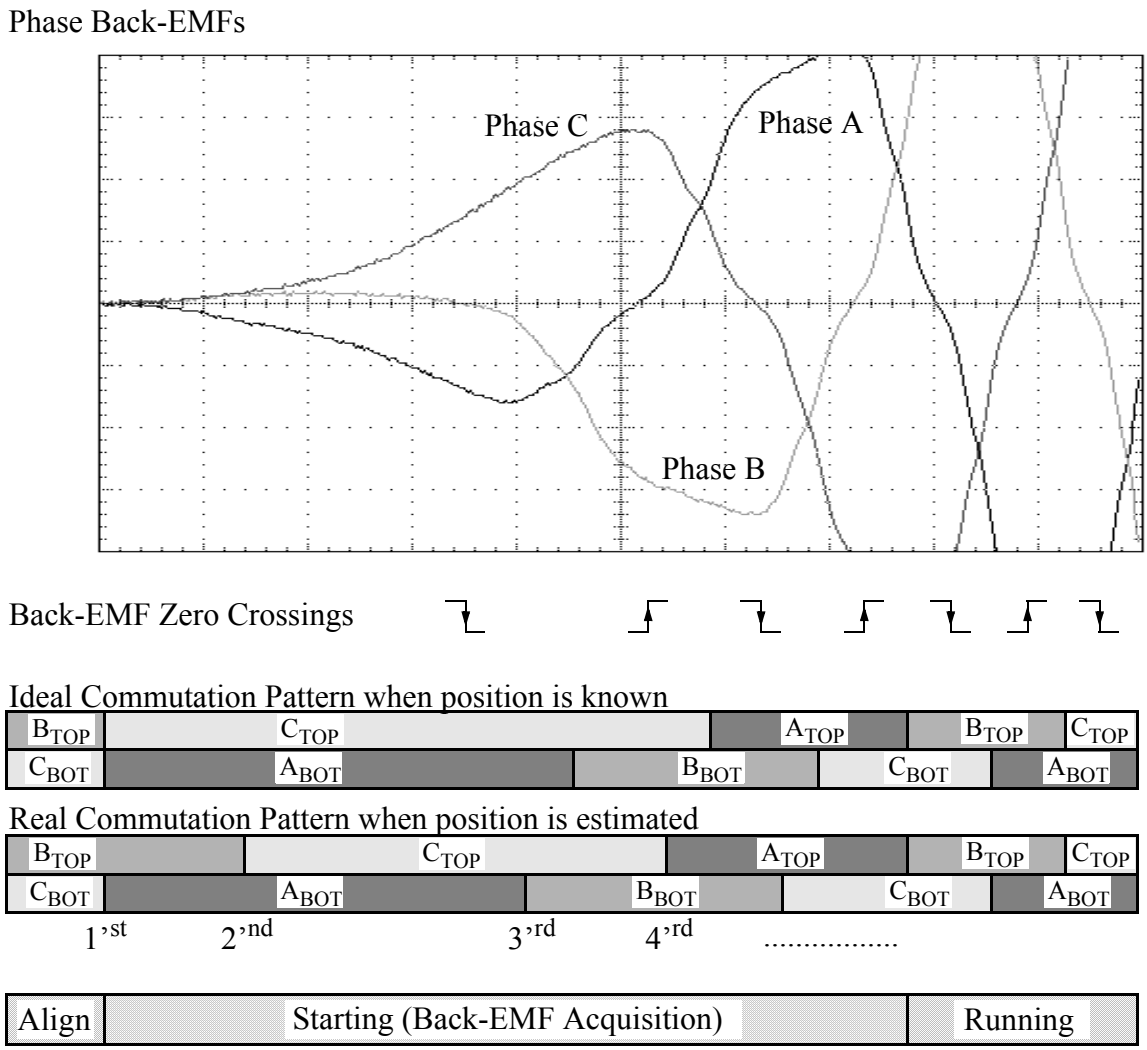

Figure 3-21. Back-EMF at Start-Up

Figure 3-21 demonstrates the Back-EMF during the start-up. The amplitude of the Back-EMF varies according to the rotor speed. During the Starting (Back-EMF Acquisition) state the commutation is done in advance. In the Running state the commutation is done at the right moments.

For More Information On This Product,
Go to: www.freescale.com
Freescale Semiconductor, Inc.

Figure 3-22 illustrates the sequence of the commutations during the Starting (Back-EMF Acquisition) Stage. The commutation times T2[1] and T2[2] are calculated without any influence of Back-EMF feedback.

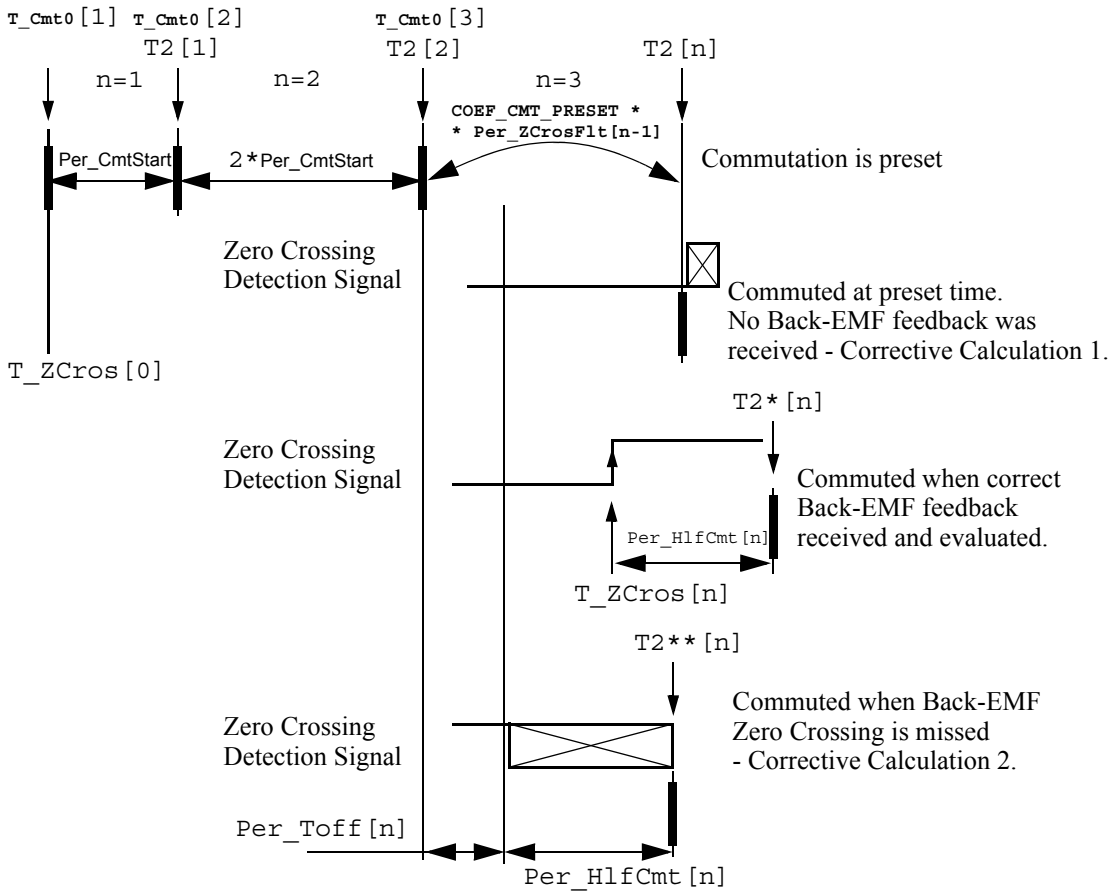

Figure 3-22. Calculation of the Commutation Times during the Starting (Back-EMF Acquisition) Stage

3.3.4.6 Starting - Commutation Times Calculation

The calculations made during Starting (**Back-EMF Acquisition) Stage** can be seen in **Section 6. Software Algorithms**.

Even the sub-states of the commutation process of Starting (Back-EMF Acquisition) state remain the same as during Running state. The required commutation timing depends on MCS state (Starting Stage,

For More Information On This Product,
Go to: www.freescale.com

Freescale Semiconductor, Inc.

Running Stage). It is provided by different setting of commutation constants **Coef_CmtPrecompFrac, Coef_CmtPrecompLShft, Coef_HlfCmt, Coef_Toff,** in structure **StartComputInit** (differs from RunComputInit). So the commutation times calculation is same as described in **3.3.4.4 Running - Commutation Times Calculation**, but the following computation coefficients are different:

```
coefficient Coef_CmtPrecomp = 2 at Starting Stage!
coefficient Coef_HlfCmt = 0.125 with advanced angle
Advance_angle: 60Deg*3/8 = 22.5Deg
       at Starting Stage!
Coef_Toff = 0.5 at Running Stage, Max_PerCmtProc = 100!
```

3.3.5 Speed Control

The speed close loop control is provided by a well known PI regulator. The actual speed (Omega_Actual) is computed from average of two BEMF Zero Crossing periods (time intervals) received from the sensorless commutation control block.

The speed controller works with constant execution (sampling) period **PER_SPEED_SAMPLE_S** (request from timer interrupt).

Freescale Semiconductor, Inc.

For More Information On This Product,
Go to: www.freescale.com

Section 4. Hardware Design

4.1 Contents

4.2 System Configuration and Documentation 57
4.3 All HW Sets Components 66
4.4 Low-Voltage Evaluation Motor Hardware Set Components . . . 68
4.5 Low-Voltage Hardware Set Components 70
4.6 High-Voltage Hardware Set Components. 73

4.2 System Configuration and Documentation

The application is designed to drive the 3-phase BLDC motor. The HW is a modular system composed from board and motor. There are three possible hardware options:

- High-Voltage Hardware Set Configuration
- Low-Voltage Evaluation Motor Hardware Set Configuration
- All HW Sets Components

Automatic board identification allows one software program runs on each of three hardware and motor platforms without any change of parameters

The following subsection shows the system configurations.

They systems consists of the following modules (see also **Figure 4-3**, **Figure 4-1**, **Figure 4-2**):

For all hardware options:

- DSP56F805EVM Controller Board

For More Information On This Product,
Go to: www.freescale.com

Freescale Semiconductor, Inc.

For High-Voltage Hardware Set cofiguration:

- 3-Phase AC/BLDC High Voltage Power Stage
- Optoisolation Board
- 3-phase BLDC High Voltage Motor with Motor Brake

For Low-Voltage Evaluation Motor Hardware Set configuration:

- EVM Motor Board
- 3-phase Low Voltage EVM BLDC Motor

Low-Voltage Hardware Set configuration:

- 3-Ph AC/BLDC Low Voltage Power Stage
- 3-phase BLDC Low Voltage Motor with Motor Brake

Figure 4-3, **Figure 4-1** and **Figure 4-2** show the configuration with MMDS evaluation board.

The sections **4.3 All HW Sets Components**, **4.6 High-Voltage Hardware Set Components**, **4.4 Low-Voltage Evaluation Motor Hardware Set Components** and **4.5 Low-Voltage Hardware Set Components** will describe the individual boards.

Freescale Semiconductor, Inc.

For More Information On This Product,
Go to: www.freescale.com

THIS PAGE INTENTIONALLY LEFT BLANK

Freescale Semiconductor, Inc.

For More Information On This Product,
Go to: www.freescale.com

4.2.1 Low-Voltage Evaluation Motor Hardware Set Configuration

The system configuration for a low-voltage evaluation motor hardware set is shown in **Figure 4-1**.

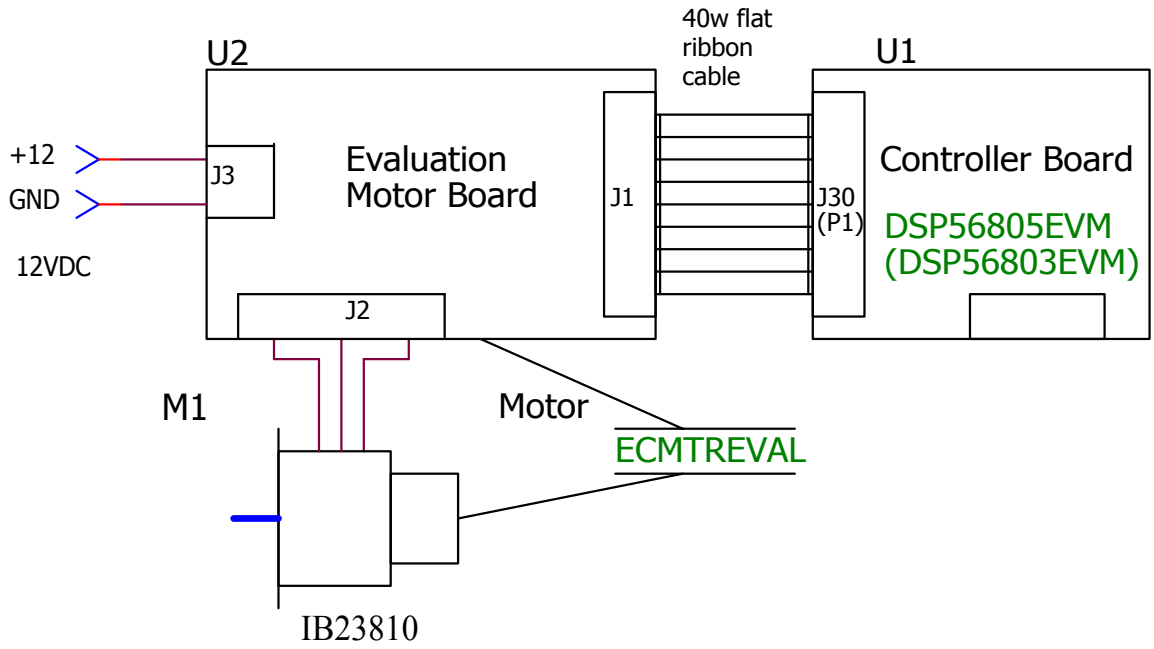

Figure 4-1. Low-Voltage Evaluation Motor Hardware System Configuration

All the system parts are supplied and documented according to the following references:

- M1 - IB23810 Motor
  - supplied in kit with IB23810 Motor as: ECMTREVAL - Evaluation Motor Board Kit
- U2 3 ph AC/BLDC Low Voltage Power Stage:
  - supplied in kit with IB23810 Motor as: ECMTREVAL - Evaluation Motor Board Kit
  - Described in: *Motorola Embedded Motion Control Evaluation Motor Board User's Manual* (Motorola document order number MEMCEVMBUM/D) see **References 5**

For More Information On This Product,
Go to: www.freescale.com
Freescale Semiconductor, Inc.

- U1 Controller Board for DSP56F805:
  - supplied as: DSP56805EVM
  - described in: *DSP Evaluation Module Hardware User's Manual* (Motorola document order number DSP56F805EVMUM/D), see **References 2**

The individual modules are described in some sections below. More detailed descriptions of the boards can be found in comprehensive User's Manuals belonging to each board (**References 2**, **5**). These manuals are available on on the World Wide Web at:

http://www.motorola.com

The User's Manual incorporates the schematic of the board, description of individual function blocks and a bill of materials. An individual board can be ordered from Motorola as a standard product.

Freescale Semiconductor, Inc.

For More Information On This Product,
Go to: www.freescale.com

4.2.2 Low-Voltage Hardware Set Configuration

The system configuration for low-voltage hardware set is shown in **Figure 4-2**.

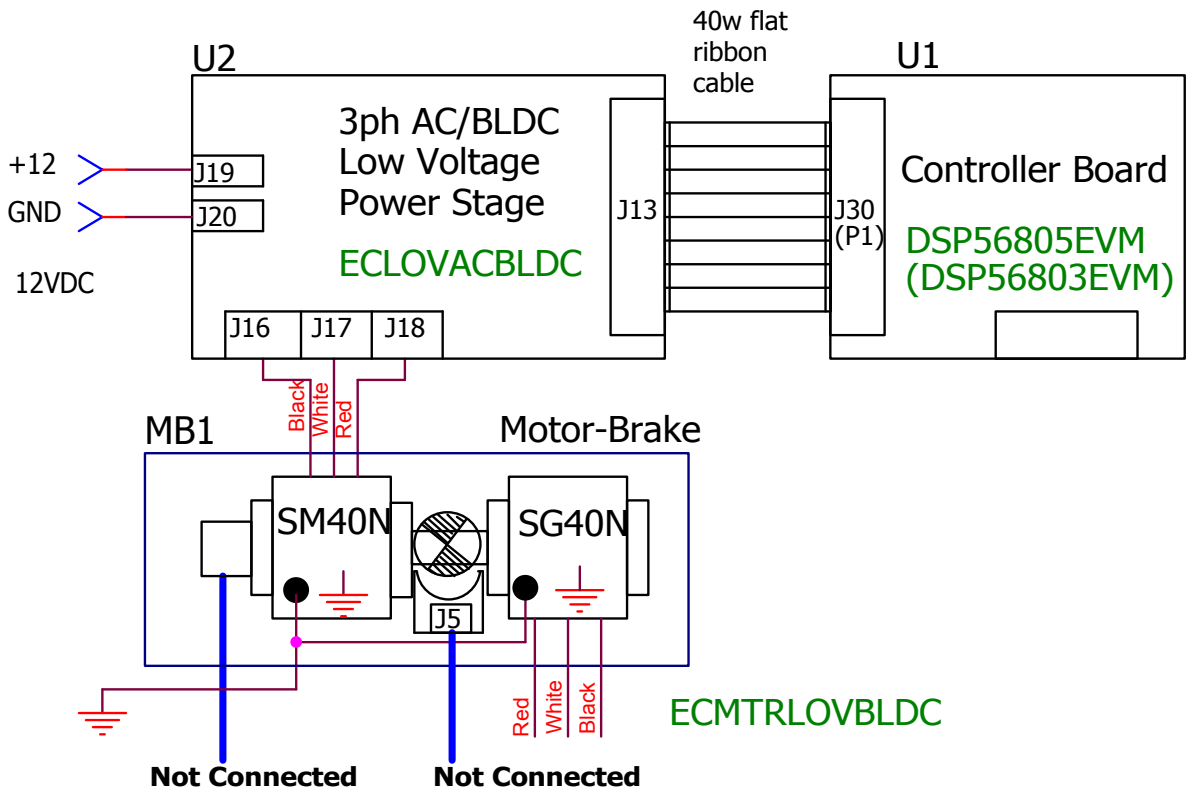

Figure 4-2. Low-Voltage Hardware System Configuration

All the system parts are supplied and documented according to the following references:

- U1 Controller Board for DSP56F805:
  - supplied as: DSP56805EVM
  - described in: *DSP Evaluation Module Hardware User's Manual* (Motorola document order number DSP56F805EVMUM/D), see **References 2**.
- U2 — 3-Phase AC/BLDC Low Voltage Power Stage

For More Information On This Product,
Go to: www.freescale.com
Freescale Semiconductor, Inc.

  - Supplied as: ECLOVACBLDC
  - Described in: *Motorola Embedded Motion Control 3-Phase BLDC Low-Voltage Power Stage User's Manual* (Motorola document order number MEMC3PBLDCLVUM/D3), see **References 6**.
- MB1 - Motor-Brake SM40N + SG40N
  - supplied as: ECMTRLOVBLDC

The individual modules are described in some sections below. More detailed descriptions of the boards can be found in comprehensive User's Manuals belonging to each board (**References 2**, **6**). These manuals are available on on the World Wide Web at:

http://www.motorola.com

The User's Manual incorporates the schematic of the board, description of individual function blocks and a bill of materials. An individual board can be ordered from Motorola as a standard product.

Freescale Semiconductor, Inc.

For More Information On This Product,
Go to: www.freescale.com

4.2.3 High-Voltage Hardware Set Configuration

The system configuration for a high-voltage hardware set is shown in **Figure 4-3**.

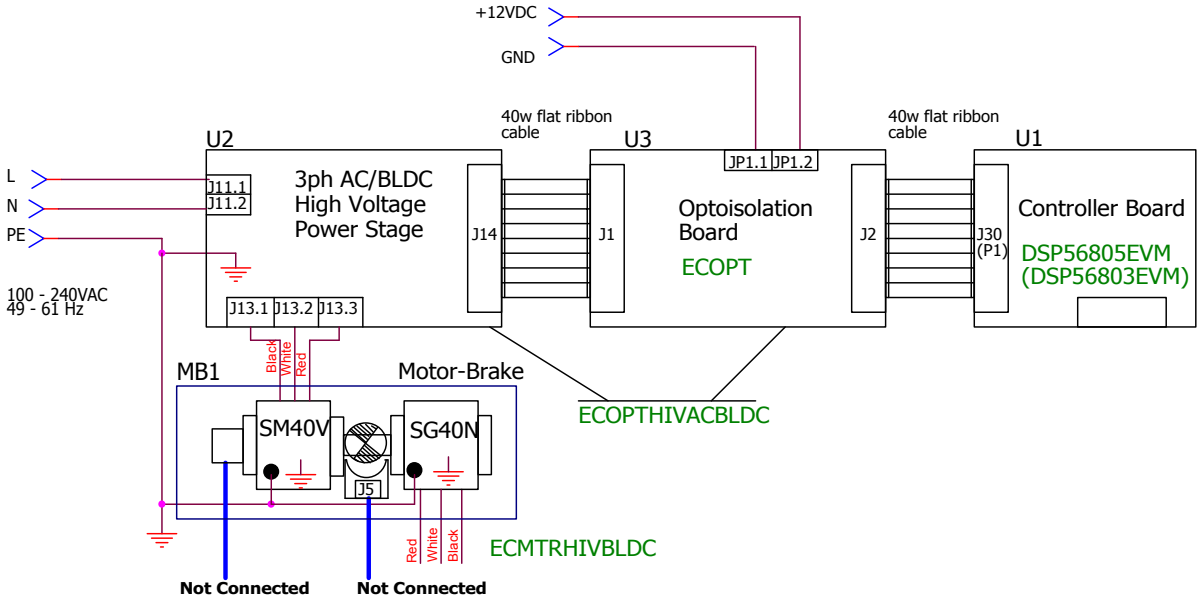

Figure 4-3. High-Voltage Hardware System Configuration

All the system parts are supplied and documented according to the following references:

- U1 Controller Board for DSP56F805:
  - supplied as: DSP56805EVM
  - described in: *DSP Evaluation Module Hardware User's Manual* (Motorola document order number DSP56F805EVMUM/D), see **References 2**.
- U2 — 3-Phase AC/BLDC High Voltage Power Stage:
  - Supplied in kit with optoisolation board as: ECOPTHIVACBLDC
  - Described in: *3-Phase AC Brushless DC High Voltage Power Stage User's Manual* (Motorola document order number MEMC3PBLDCPSUM/D), see **References 3**.

For More Information On This Product,
Go to: www.freescale.com
Freescale Semiconductor, Inc.

- U3 — Optoisolation Board
  - Supplied with 3-phase AC/BLDC high voltage power stage as: ECOPTHIVACBLDC
  - Or, supplied alone as: ECOPT–ECOPT optoisolation board
  - Described in: *Optoisolation Board User's Manual* (Motorola document order number MEMCOBUM/D), see **References 4**.

NOTE: *It is strongly recommended to use opto-isolation (optocouplers and optoisolation amplifiers) during development time to avoid any damage to the development equipment.*

- MB1 — Motor-Brake SM40V + SG40N
  - Supplied as: ECMTRHIVBLDC

The individual modules are described in some sections below. More detailed descriptions of the boards can be found in comprehensive User's Manuals belonging to each board (**References 2**, **3**, **4**). These manuals are available on on the World Wide Web at:

http://www.motorola.com

The User's Manual incorporates the schematic of the board, description of individual function blocks and a bill of materials. An individual board can be ordered from Motorola as a standard product.

Freescale Semiconductor, Inc.

For More Information On This Product,
Go to: www.freescale.com

4.3 All HW Sets Components

4.3.1 DSP56F805EVM Controller Board

The DSP56F805EVM is used to demonstrate the abilities of the DSP56F805 and to provide a hardware tool allowing the development of applications that use the DSP56F805.

The DSP56F805EVM is an evaluation module board that includes a DSP56F805 part, peripheral expansion connectors, external memory and a CAN interface. The expansion connectors are for signal monitoring and user feature expandability.

The DSP56F805EVM is designed for the following purposes:

- Allowing new users to become familiar with the features of the 56800 architecture. The tools and examples provided with the DSP56F805EVM facilitate evaluation of the feature set and the benefits of the family.
- Serving as a platform for real-time software development. The tool suite enables the user to develop and simulate routines, download the software to on-chip or on-board RAM, run it, and debug it using a debugger via the JTAG/OnCE™ port. The breakpoint features of the OnCE port enable the user to easily specify complex break conditions and to execute user-developed software at full-speed, until the break conditions are satisfied. The ability to examine and modify all user accessible registers, memory and peripherals through the OnCE port greatly facilitates the task of the developer.
- Serving as a platform for hardware development. The hardware platform enables the user to connect external hardware peripherals. The on-board peripherals can be disabled, providing the user with the ability to reassign any and all of the DSP's peripherals. The OnCE port's unobtrusive design means that all of the memory on the board and on the DSP chip are available to the user.

The DSP56F805EVM provides the features necessary for a user to write and debug software, demonstrate the functionality of that software and

Freescale Semiconductor, Inc.

For More Information On This Product,
Go to: www.freescale.com

interface with the customer's application-specific device(s). The DSP56F805EVM is flexible enough to allow a user to fully exploit the DSP56F805's features to optimize the performance of their product, as shown in **Figure 4-4**.

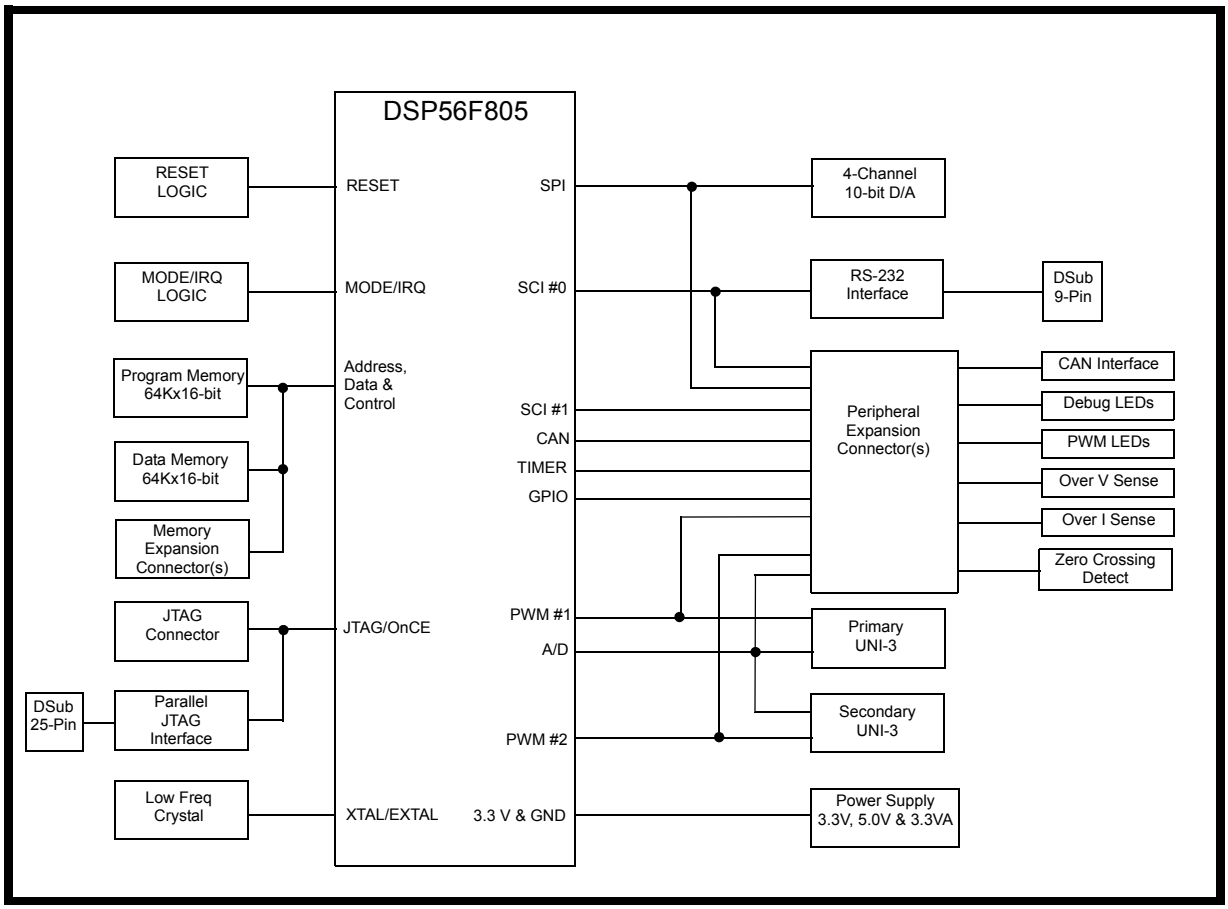

Figure 4-4. Block Diagram of the DSP56F805EVM

Freescale Semiconductor, Inc.

For More Information On This Product,
Go to: www.freescale.com

4.4 Low-Voltage Evaluation Motor Hardware Set Components

4.4.1 EVM Motor Board

Motorola's embedded motion control series EVM motor board is a 12-volt, 4-amp, surface-mount power stage that is shipped with an MCG IB23810-H1 brushless dc motor. In combination with one of the embedded motion control series control boards, it provides a software development platform that allows algorithms to be written and tested without the need to design and build a power stage. It supports algorithms that use Hall sensors, encoder feedback, and back EMF (electromotive force) signals for sensorless control.

The EVM motor board does not have overcurrent protection that is independent of the control board, so some care in its setup and use is required if a lower impedance motor is used. With the motor that is supplied in the kit, the power output stage will withstand a full-stall condition without the need for overcurrent protection. Current measuring circuitry is set up for 4 amps full scale. In a 25°C ambient operation at up to 6 amps continuous RMS output current is within the board's thermal limits.

Input connections are made via 40-pin ribbon cable connector J1. Power connections to the motor are made on output connector J2. Phase A, phase B, and phase C are labeled on the board. Power requirements are met with a single external 12-Vdc, 4-amp power supply. Two connectors, labeled J3 and J4, are provided for the 12-volt power supply. J3 and J4 are located on the front edge of the board. Power is supplied to one or the other, but not both.

4.4.1.1 Electrical Characteristics of the EVM Motor Board

The electrical characteristics in **Table 4-1** apply to operation at 25°C and a 12-Vdc power supply voltage.

Freescale Semiconductor, Inc.

For More Information On This Product,
Go to: www.freescale.com

Table 4-1. Electrical Characteristics of the EVM Motor Board

Characteristic	Symbol	Min	Typ	Max	Units
Power Supply Voltage	Vdc	10	12	16	V
Quiescent Current	I_{CC}	—	50	—	mA
Min Logic 1 Input Voltage	V_{IH}	2.4	—	—	V
Max Logic 0 Input Voltage	V_{IL}	—	—	0.8	V
Input Resistance	R_{In}	—	10	—	kΩ
Analog Output Range	V_{Out}	0	—	3.3	V
Bus Current Sense Voltage	I_{Sense}	—	412	—	mV/A
Bus Voltage Sense Voltage	V_{Bus}	—	206	—	mV/V
Power MOSFET On Resistance	$R_{DS(On)}$	—	32	40	MΩ
RMS Output Current	I_M	—	—	6	A
Total Power Dissipation	P_{diss}	—	—	5	W

4.4.2 3-phase Low Voltage EVM BLDC Motor

The EVM Motor Board is shipped with an MCG IB23810-H1 brushless dc motor. Motor-brake specifications are listed in **Table 2-1**, **Section 2.** Other detailed motor characteristics are in **Table 4-2** this section. They apply to operation at 25°C.

Table 4-2. Characteristics of the BLDC motor

Characteristic	Symbol	Min	Typ	Max	Units
Terminal Voltage	V_t	—	—	60	V
Speed @ V_t		—	5000	—	RPM
Torque Constant	K_t	—	0.08	—	Nm/A
Voltage Constant	K_e	—	8.4	—	V/kRPM
Winding Resistance	R_t	—	2.8	—	Ω
Winding Inductance	L	—	8.6	—	mH

For More Information On This Product,
Go to: www.freescale.com

Freescale Semiconductor, Inc.

Table 4-2. Characteristics of the BLDC motor

Continuous Current	I_{cs}	—	—	2	A
Peak Current	I_{ps}	—	—	5.9	A
Inertia	J_m	—	0.075	—	$kgcm^2$
Thermal Resistance		—	—	3.6	°C/W

4.5 Low-Voltage Hardware Set Components

4.5.1 3-Ph AC/BLDC Low Voltage Power Stage

Motorola's embedded motion control series low-voltage (LV) brushless DC (BLDC) power stage is designed to run 3-ph. BLDC and PM Synchronous motors. It operates from a nominal 12-volt motor supply, and delivers up to 30 amps of rms motor current from a dc bus that can deliver peak currents up to 46 amps. In combination with one of Motorola's embedded motion control series control boards, it provides a software development platform that allows algorithms to be written and tested, without the need to design and build a power stage. It supports a wide variety of algorithms for controlling BLDC motors and PM Synchronous motors.

Input connections are made via 40-pin ribbon cable connector J13. Power connections to the motor are made with fast-on connectors J16, J17, and J18. They are located along the back edge of the board, and are labeled Phase A, Phase B, and Phase C. Power requirements are met with a 12-volt power supply that has a 10- to 16-volt tolerance. Fast-on connectors J19 and J20 are used for the power supply. J19 is labeled +12V and is located on the back edge of the board. J20 is labeled 0V and is located along the front edge. Current measuring circuitry is set up for 50 amps full scale. Both bus and phase leg currents are measured. A cycle by cycle overcurrent trip point is set at 46 amps.

The LV BLDC power stage has both a printed circuit board and a power substrate. The printed circuit board contains MOSFET gate drive circuits, analog signal conditioning, low-voltage power supplies, and some of the large passive power components. This board also has a

For More Information On This Product,
Go to: www.freescale.com
Freescale Semiconductor, Inc.

68HC705JJ7 microcontroller used for board configuration and identification. All of the power electronics that need to dissipate heat are mounted on the power substrate. This substrate includes the power MOSFETs, brake resistors, current-sensing resistors, bus capacitors, and temperature sensing diodes. **Figure 4-6** shows a block diagram.

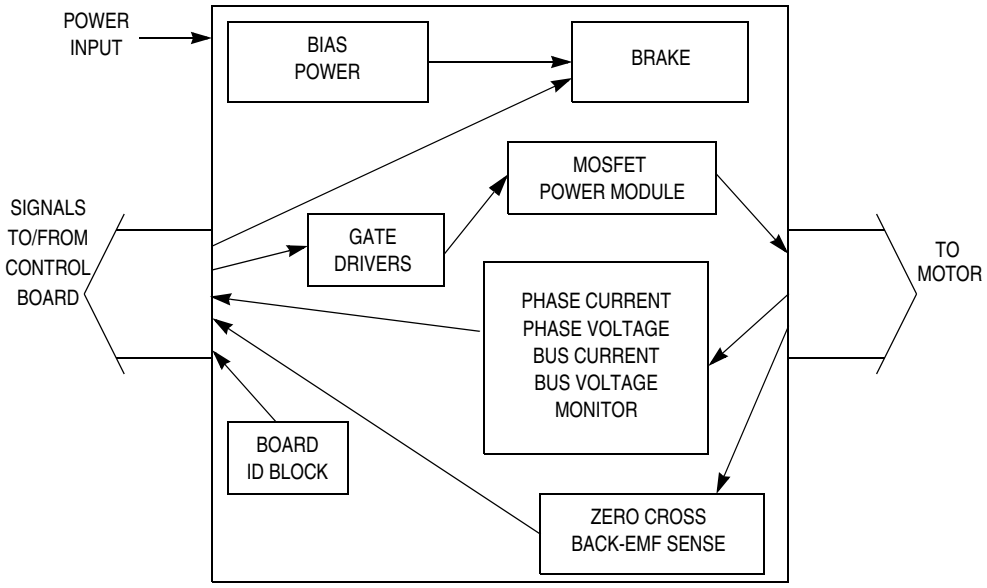

Figure 4-5. Block Diagram

Freescale Semiconductor, Inc.

4.5.1.1 Electrical Characteristics of the 3-Ph BLDC Low Voltage Power Stage

The electrical characteristics in **Table 4-3** apply to operation at 25°C with a 12-Vdc supply voltage.

For More Information On This Product,
Go to: www.freescale.com

Table 4-3. Electrical Chatacteristics of the 3-Ph BLDC Low Voltage Power Stage

Characteristic	Symbol	Min	Typ	Max	Units
Motor Supply Voltage	Vac	10	12	16	V
Quiescent current	I_{CC}	—	175	—	mA
Min logic 1 input voltage	V_{IH}	2.0	—	—	V
Max logic 0 input voltage	V_{IL}	—	—	0.8	V
Analog output range	V_{Out}	0	—	3.3	V
Bus current sense voltage	I_{Sense}	—	33	—	mV/A
Bus voltage sense voltage	V_{Bus}	—	60	—	mV/V
Peak output current (300 ms)	I_{PK}	—	—	46	A
Continuous output current	I_{RMS}	—	—	30	A
Brake resistor dissipation (continuous)	P_{BK}	—	—	50	W
Brake resistor dissipation (15 sec pk)	$P_{BK(Pk)}$	—	—	100	W
Total power dissipation	P_{diss}	—	—	85	W

4.5.2 3-phase BLDC Low Voltage Motor with Motor Brake

The Low Voltage BLDC motor-brake set incorporates a 3-phase Low Voltage BLDC motor EM Brno SM40N and attached BLDC motor brake SG40N. The BLDCmotor has six poles. The incremental position encoder is coupled to the motor shaft, and position Hall sensors are mounted between motor and brake. They allow sensing of the position if required by the control algorithm, which is not required in this sensorless application. Detailed motor-brake specifications are listed in **Table 2-2**, **Section 2.**

Freescale Semiconductor, Inc.

For More Information On This Product,
Go to: www.freescale.com

4.6 High-Voltage Hardware Set Components

4.6.1 3-Phase AC/BLDC High Voltage Power Stage

Motorola's embedded motion control series high-voltage (HV) ac power stage is a 180-watt (one-fourth horsepower), 3-phase power stage that will operate off of dc input voltages from 140 to 230 volts and ac line voltages from 100 to 240 volts. In combination with one of the embedded motion control series control boards and an optoisolation board, it provides a software development platform that allows algorithms to be written and tested without the need to design and build a power stage. It supports a wide variety of algorithms for both ac induction and brushless dc (BLDC) motors.

Input connections are made via 40-pin ribbon cable connector J14. Power connections to the motor are made on output connector J13. Phase A, phase B, and phase C are labeled PH_A, Ph_B, and Ph_C on the board. Power requirements are met with a single external 140- to 230-volt dc power supply or an ac line voltage. Either input is supplied through connector J11. Current measuring circuitry is set up for 2.93 amps full scale. Both bus and phase leg currents are measured. A cycle-by-cycle over-current trip point is set at 2.69 amps.

The high-voltage ac power stage has both a printed circuit board and a power substrate. The printed circuit board contains IGBT gate drive circuits, analog signal conditioning, low-voltage power supplies, power factor control circuitry, and some of the large, passive, power components. All of the power electronics which need to dissipate heat are mounted on the power substrate. This substrate includes the power IGBTs, brake resistors, current sensing resistors, a power factor correction MOSFET, and temperature sensing diodes. **Figure 4-6** shows a block diagram.

Freescale Semiconductor, Inc.

For More Information On This Product,
Go to: www.freescale.com

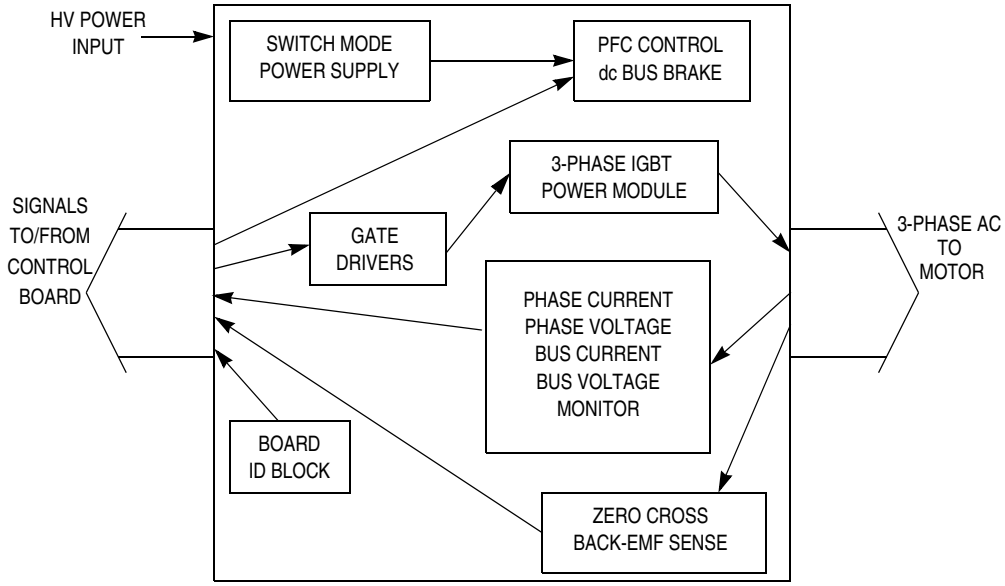

Figure 4-6. 3-Phase AC High Voltage Power Stage

4.6.1.1 Electrical Characteristics of the 3-Phase AC/BLDC High Voltage Power Stage

The electrical characteristics in **Table 4-4** apply to operation at 25°C with a 160-Vdc power supply voltage.

Freescale Semiconductor, Inc.

For More Information On This Product,
Go to: www.freescale.com

Table 4-4. Electrical Characteristics of Power Stage

Characteristic	Symbol	Min	Typ	Max	Units
dc input voltage	Vdc	140	160	230	V
ac input voltage	Vac	100	208	240	V
Quiescent current	I_{CC}	—	70	—	mA
Min logic 1 input voltage	V_{IH}	2.0	—	—	V
Max logic 0 input voltage	V_{IL}	—	—	0.8	V
Input resistance	R_{In}	—	10 kΩ	—	
Analog output range	V_{Out}	0	—	3.3	V
Bus current sense voltage	I_{Sense}	—	563	—	mV/A
Bus voltage sense voltage	V_{Bus}	—	8.09	—	mV/V
Peak output current	I_{PK}	—	—	2.8	A
Brake resistor dissipation (continuous)	P_{BK}	—	—	50	W
Brake resistor dissipation (15 sec pk)	$P_{BK(Pk)}$	—	—	100	W
Total power dissipation	P_{diss}	—	—	85	W

4.6.2 Optoisolation Board

Motorola's embedded motion control series optoisolation board links signals from a controller to a high-voltage power stage. The board isolates the controller, and peripherals that may be attached to the controller, from dangerous voltages that are present on the power stage. The optoisolation board's galvanic isolation barrier also isolates control signals from high noise in the power stage and provides a noise-robust systems architecture.

Signal translation is virtually one-for-one. Gate drive signals are passed from controller to power stage via high-speed, high dv/dt, digital optocouplers. Analog feedback signals are passed back through HCNR201 high-linearity analog optocouplers. Delay times are typically

For More Information On This Product,
Go to: www.freescale.com

Freescale Semiconductor, Inc.

250 ns for digital signals, and 2 µs for analog signals. Grounds are separated by the optocouplers' galvanic isolation barrier.

Both input and output connections are made via 40-pin ribbon cable connectors. The pin assignments for both connectors are the same. For example, signal PWM_AT appears on pin 1 of the input connector and also on pin 1 of the output connector. In addition to the usual motor control signals, an MC68HC705JJ7CDW serves as a serial link, which allows controller software to identify the power board.

Power requirements for controller side circuitry are met with a single external 12-Vdc power supply. Power for power stage side circuitry is supplied from the power stage through the 40-pin output connector.

4.6.2.1 Electrical Characteristics of the Optoisolation Board

The electrical characteristics in **Table 4-5** apply to operation at 25°C, and a 12-Vdc power supply voltage.

Table 4-5. Electrical Characteristics

Characteristic	Symbol	Min	Typ	Max	Units	Notes
Power Supply Voltage	Vdc	10	12	30	V	
Quiescent Current	I_{CC}	70(1)	200(2)	500(3)	mA	dc/dc converter
Min Logic 1 Input Voltage	V_{IH}	2.0	—	—	V	HCT logic
Max Logic 0 Input Voltage	V_{IL}	—	—	0.8	V	HCT logic
Analog Input Range	V_{In}	0	—	3.3	V	
Input Resistance	R_{In}	—	10	—	kΩ	
Analog Output Range	V_{Out}	0	—	3.3	V	
Digital Delay Time	t_{DDLY}	—	0.25	—	µs	
Analog Delay Time	t_{ADLY}	—	2	—	µs	

1. Power supply powers optoisolation board only.
2. Current consumption of optoisolation board plus DSP EMV board (powered from this power supply)
3. Maximum current handled by dc/dc converters

For More Information On This Product,
Go to: www.freescale.com
Freescale Semiconductor, Inc.

4.6.3 3-phase BLDC High Voltage Motor with Motor Brake

The High Voltage BLDC motor-brake set incorporates a 3-phase High Voltage BLDC motor and attached BLDC motor brake. The BLDCmotor has six poles. The incremental position encoder is coupled to the motor shaft, and position Hall sensors are mounted between motor and brake. They allow sensing of the position if required by the control algorithm. Detailed motor-brake specifications are listed in **Table 2-3**, **Section 2.**

Freescale Semiconductor, Inc.

For More Information On This Product,
Go to: www.freescale.com

Freescale Semiconductor, Inc.

For More Information On This Product,
Go to: www.freescale.com

Section 5. Software Design

5.1 Contents

5.2 Introduction 79
5.3 Main SW Flow Chart 79
5.4 Data Flow 82
5.5 State Diagram 88

5.2 Introduction

This section describes the design of the software blocks of the drive. The software will be described in terms of:

- Main SW Flow Chart
- Data Flow
- State Diagram

For more information on the control technique used see **3.3 Control Technique**.

5.3 Main SW Flow Chart

The main software flow chart incorporates the Main routine entered from Reset, and interrupt states. The Main routine includes the initialization of the DSP and the main loop. It is shown in **Figure 5-1** and **Figure 5-2**.

The main loop incorporates Application State Machine - the highest SW level which precedes settings for other software levels, BLDC motor Commutation Control, Speed Control, Alignment Current Control, etc. The inputs of Application State Machine are Run/Stop Switch state,

For More Information On This Product,
Go to: www.freescale.com

Freescale Semiconductor, Inc.

Required Speed Omega and Drive Fault Status. Required Mechanical Speed can be set from PC Master or manually with Up/Down buttons.

Commutation Control proceeds BLDC motor commutation with the states described in **3.3 Control Technique** and **5.5.4 State Diagram - Process Commutation Control**.

The Speed Control is detailed description is in sections **5.4.5 Process Speed PI Controller** and **5.5.7 State Diagram - Process Speed PI Controller**. Alignment Current Control is described in **5.4.6 Process Current PI Controller** and **5.5.8 State Diagram - Process Current PI Controller**.

The Run/Stop switch is checked to provide an input for Application State Machine (ApplicationMode Start or Stop).

The interrupt subroutines provide commutation Timer services, ADC starting in the PWM reload interrupt, ADC service, ADC Zero Crossing checking, Limit analog values handling, and overcurrent and overvoltage PWM fault handling.

The Commutation Timer ISR is used for Commutation Timing and Commutation Control and Zero Crossing Checking.

The Speed/Alignment Timer ISR is used for Speed regulator time base and for Alignment state duration timing.

The PWM Reload ISR is used to start A/D conversion for ADC Zero Crossing and other channels and memorize the sampling time T_ZCSample.

The ADC Zero Crossing ISR is used to evaluate Back-EMF Zero Crossing.

The ADC completion ISR is used to read voltages, current and temperature samples from the ADC convertor. It also sets Current control and Zero Crossing Offset Request flags when the Current Control or Zero Crossing Offset setting are enabled.

The other interrupts in **Figure 5-2** are used for System Fault handling and setting of Required Mechanical Speed input for Application State Machine (ApplicationMode Start or Stop).

For More Information On This Product,
Go to: www.freescale.com
Freescale Semiconductor, Inc.

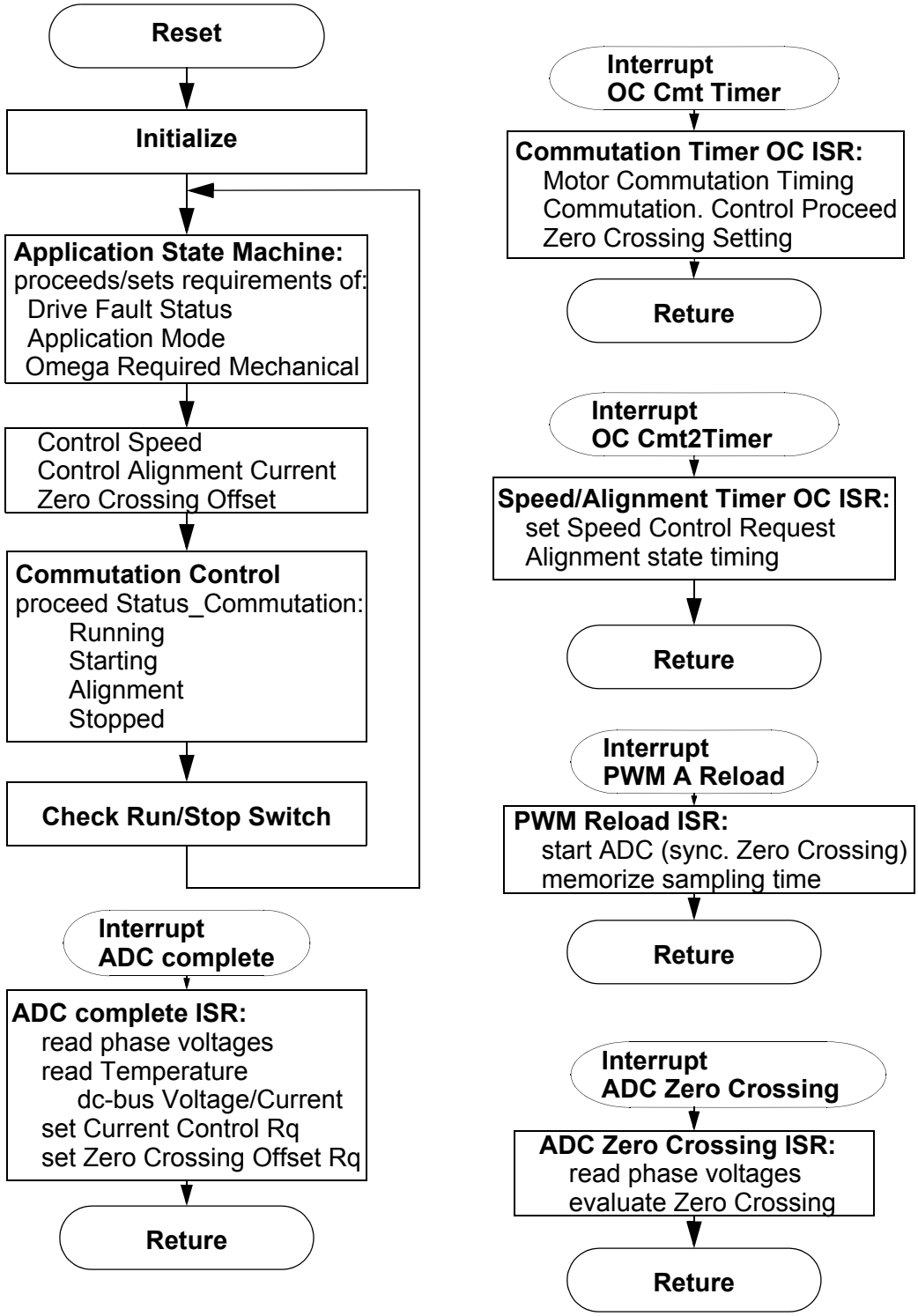

Figure 5-1. Main Software Flow Chart - Part 1

For More Information On This Product,
Go to: www.freescale.com

Freescale Semiconductor, Inc.

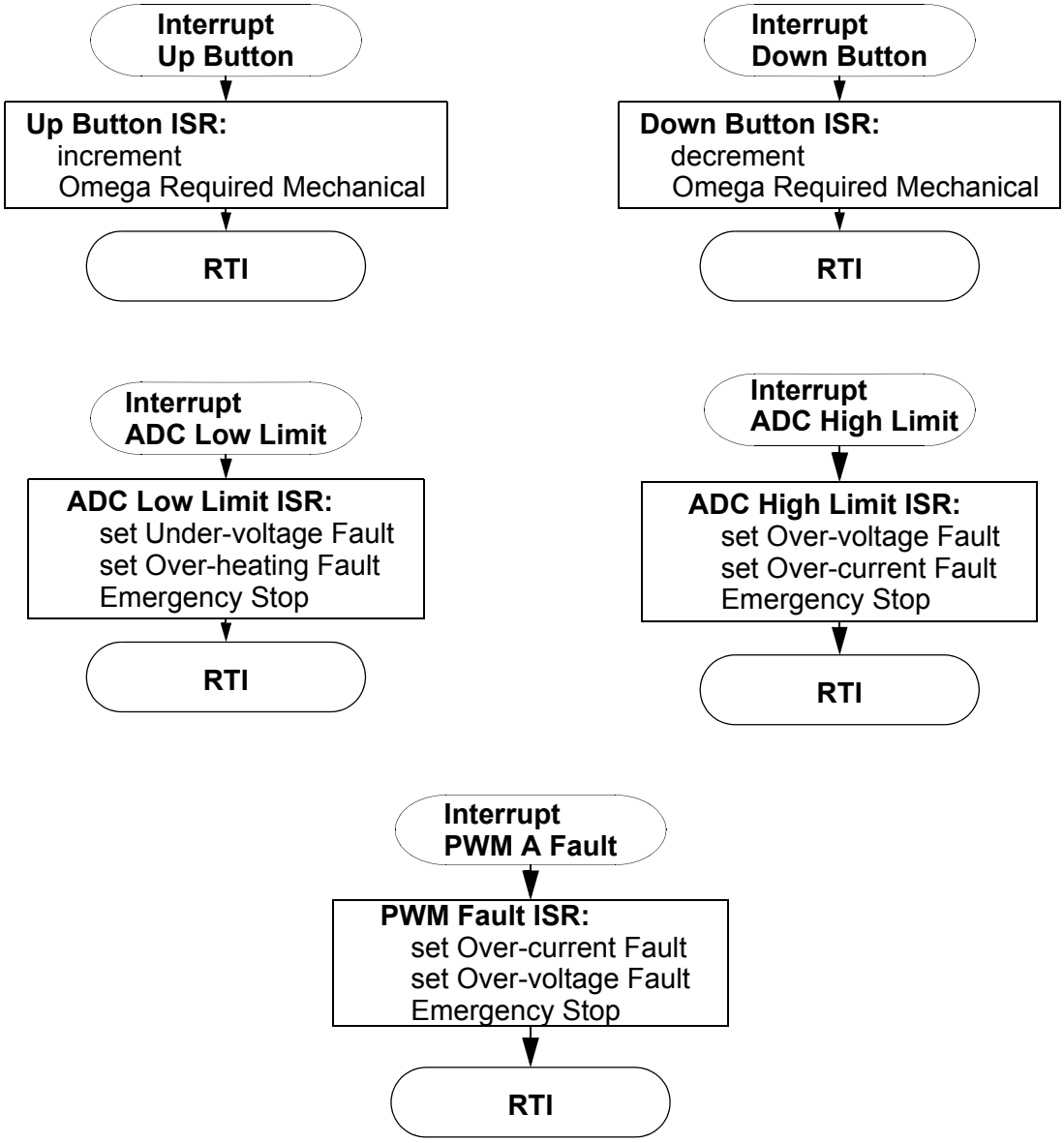

Figure 5-2. Main Software Flow Chart - Part 2

5.4 Data Flow

The control algorithm process values obtained from the user interface and sensors, generates 3-phase PWM signals for motor control (as can be seen on the data flow analysis).

For More Information On This Product,
Go to: www.freescale.com
Freescale Semiconductor, Inc.

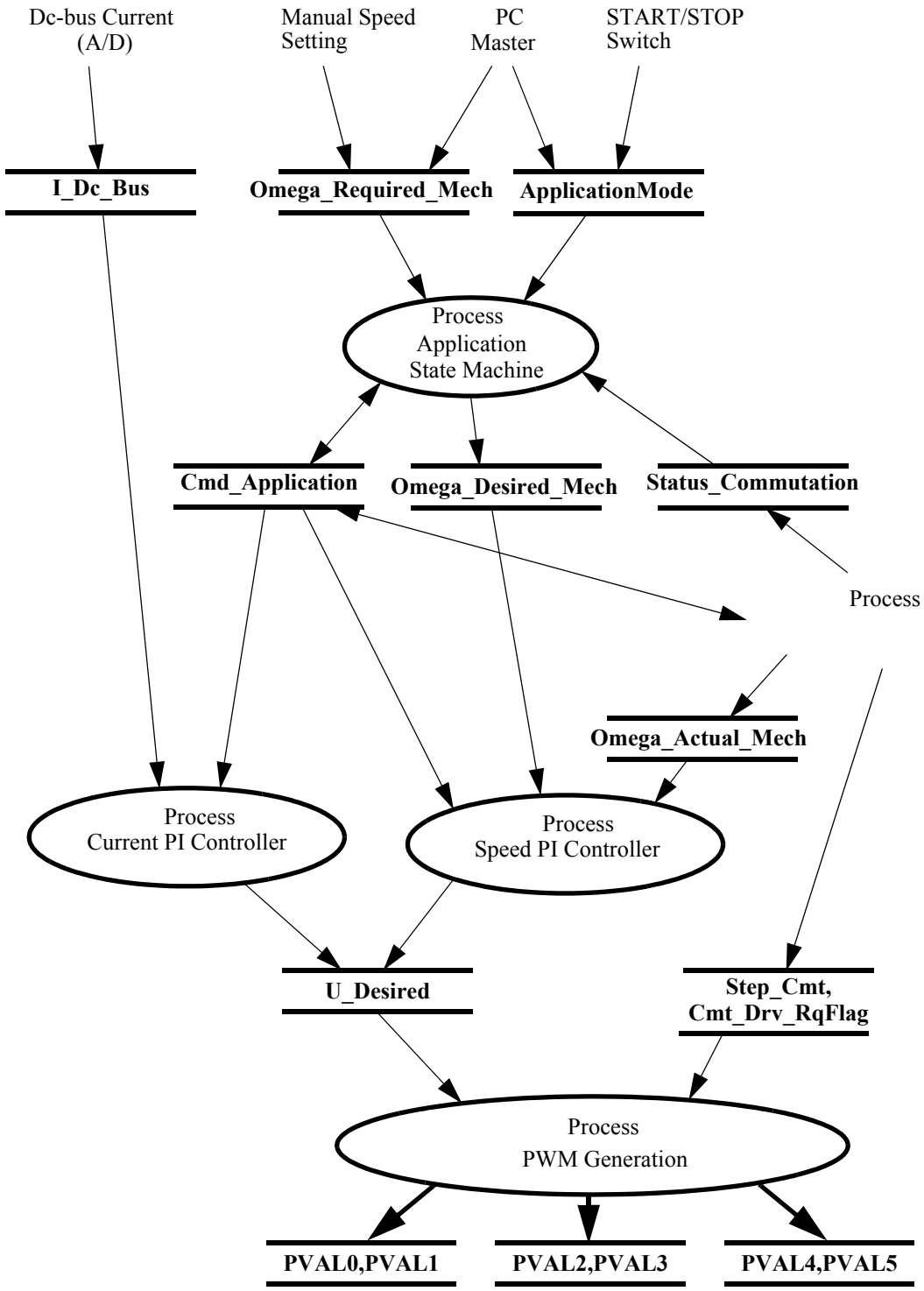

Figure 5-3. Data Flow - Part 1

For More Information On This Product,
Go to: www.freescale.com

Freescale Semiconductor, Inc.

The control algorithm of the BLDC motor drive with Back-EMF Zero Crossing using A/D convertor, is described in shown in **Figure 5-3** and **Figure 5-4**.

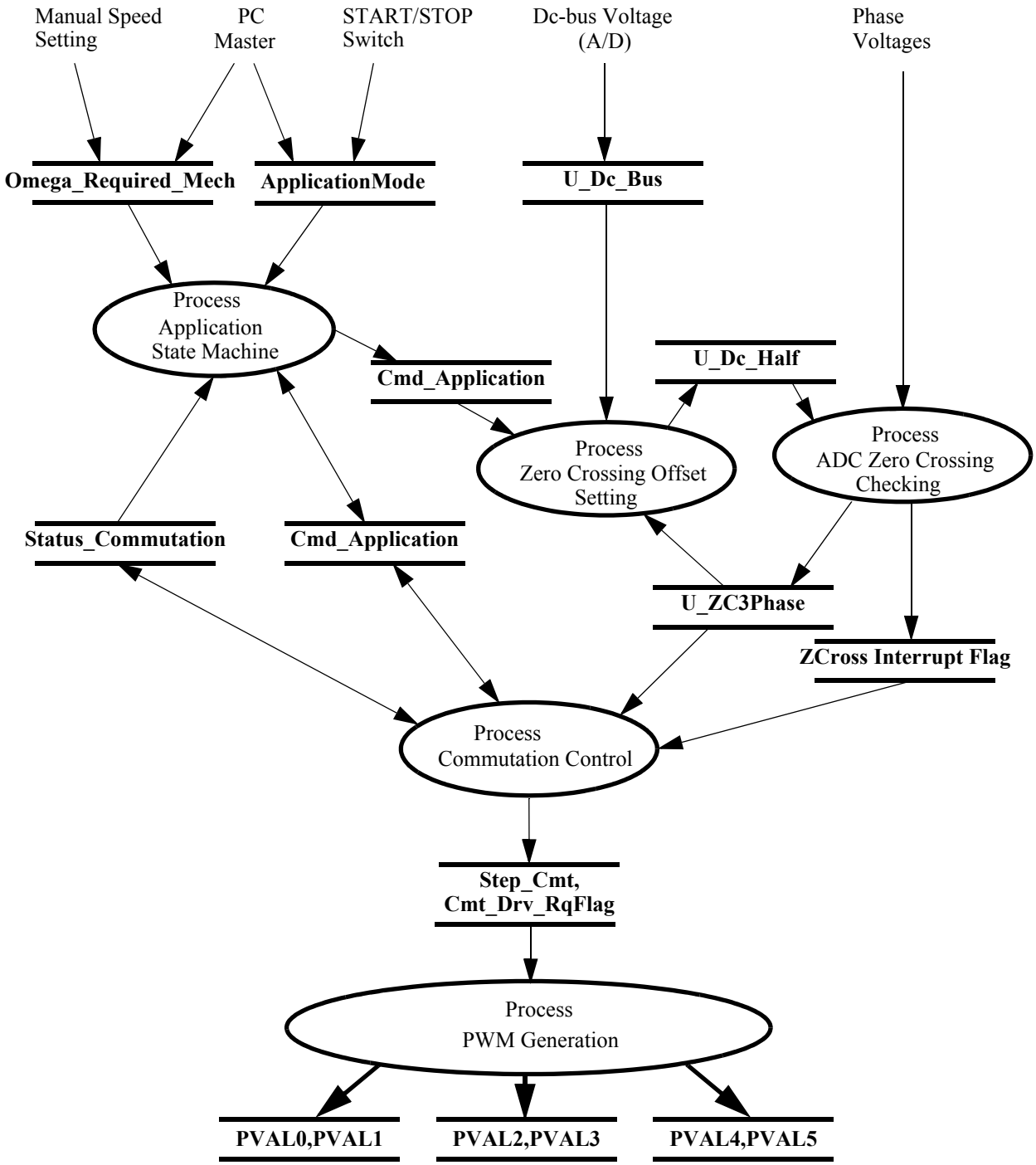

Figure 5-4. Data Flow - Part 2

For More Information On This Product,
Go to: www.freescale.com

Freescale Semiconductor, Inc.

Protection processes are shown in Figure 5-5 and described in the following sub-sections.

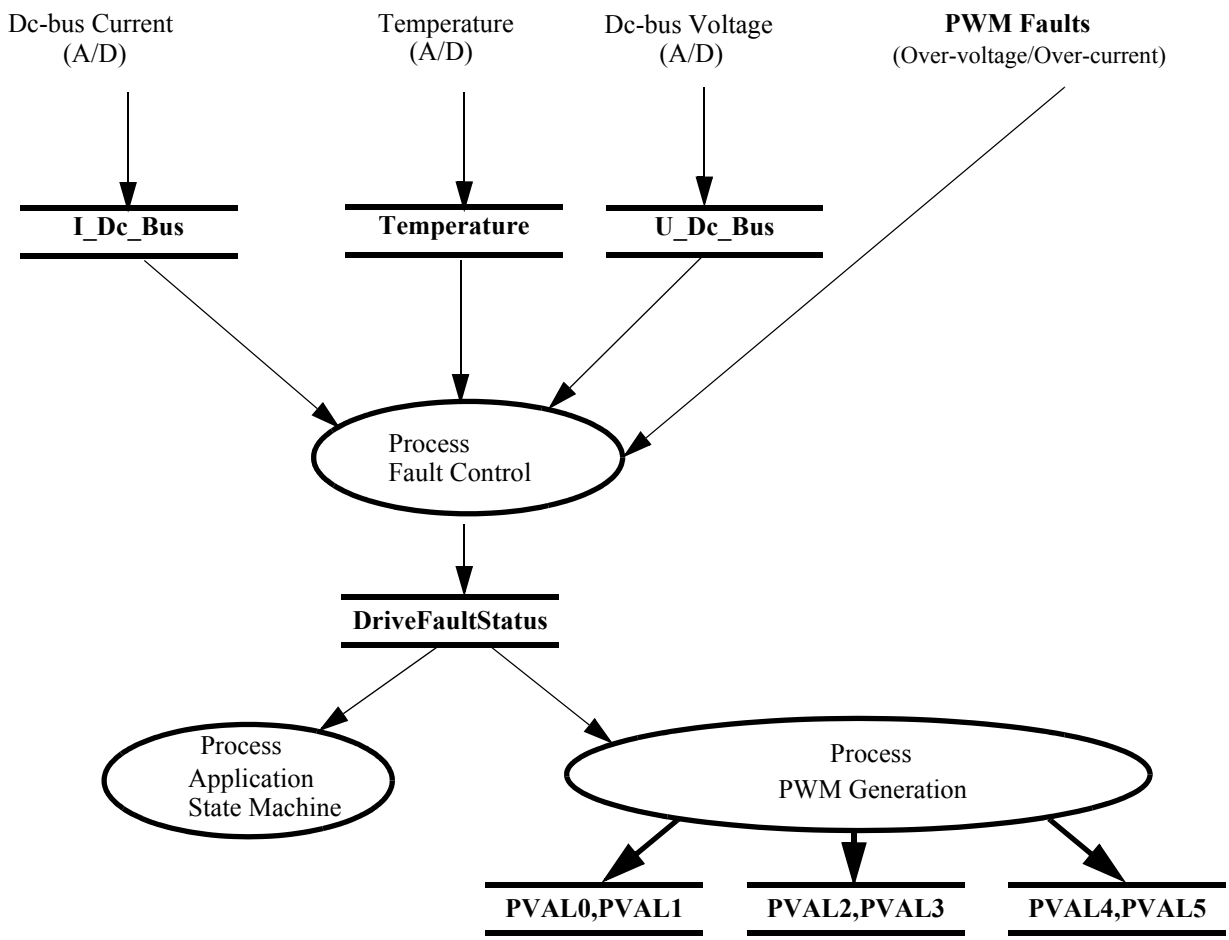

Figure 5-5. Data Flow - Part3

5.4.1 Process Application State Machine

This process controls the application subprocesses by status and command words as can be seen in Figure 5-3.

Based on the status of the **Status_Commutation** (set by the Commutation Control process) the **Cmd_Application** Rq flags are set to request calculation of the Current PI Controller (Alignment state) or Speed PI Controller (Running state) and to control the angular speed

For More Information On This Product,
Go to: www.freescale.com

Freescale Semiconductor, Inc.

setting (reflects the status of the START/STOP Switch and the Run/Stop commands).

5.4.2 Process Commutation Control

This process controls sensorless BLDC motor commutations as explained in section 3.3 Control Technique. Its outputs, **Step_Cmt** and **Cmt_Drv_RqFlag,** are used to set the PWM Generation process. The output **Omega_Actual_Mech** is used for the Speed Controller process.

5.4.3 Process ADC Zero Crossing Checking

This process is based on the ADC Zero Crossing feature. When the free (not energized) phase branch voltage changes the sign comparing previous conversion results, the Zero Crossing interrupt is initiated. Then the BLDC motor commutation control is performed in the Zero Crossing ISR.

5.4.4 Process Zero Crossing Offset Setting

In order to assure proper behavior of the ADC Zero Crossing Checking, the ADC (Zero Crossing) Offset Registers are initialized the way that the zero Back-EMF voltage is converted to zero ADC value. The initialization is provided in two steps:

- Calibration of Phase Voltage Coefficients
- Setting of the ADC Offset Registers (**U_Dc_Bus_Half**) according to measured dc-bus voltage

The ADC Offset Registers for all free phase voltages are set to **U_Dc_Bus_Half**.

The phase Zero Crossing calibration coefficient is obtained during the Alignment state (to reflect the unbalance of the sensing circuitry) from non-fed phase branch voltage measurements (average value) and dc-bus voltage measurements (average value).

- **Coef_Calibr_U_Phx** = (**U_Dc_Bus_Half** + **U_Phx**)/**U_Dc_Bus**

For More Information On This Product,
Go to: www.freescale.com
Freescale Semiconductor, Inc.

During motor running (and starting) the **U_Dc_Bus_Half** is continuously updated based on the following formula:

- **U_Dc_Bus_Half** = **Coef_Calibr_U_Phx** * **U_Dc_Bus**

5.4.5 Process Speed PI Controller

The general principle of the speed PI control loop is illustrated in **Figure 5-6**.

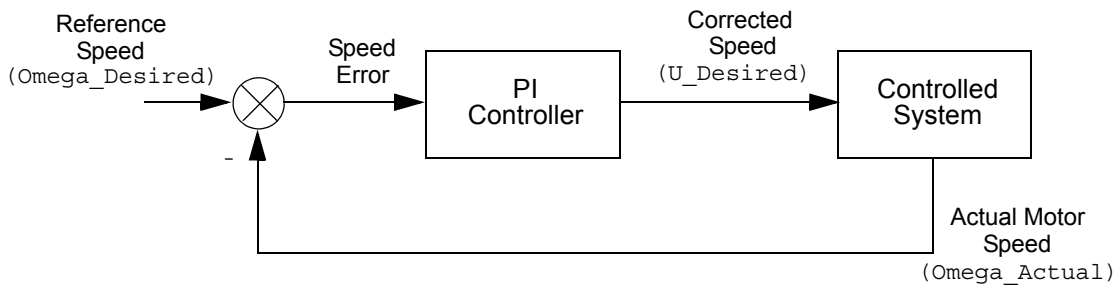

Figure 5-6. Closed Loop Control System

The speed closed loop control is characterized by the feedback of the actual motor speed. This information is compared with the reference set point and the error signal is generated. The magnitude and polarity of the error signal corresponds to the difference between the actual and desired speed. Based on the speed error, the PI controller generates the corrected motor voltage in order to compensate for the error.

The speed controller works with a constant execution (sampling) period. The request is driven from the timer interrupt with the constant **PER_SPEED_SAMPLE_S**. The PI controller is proportional and integral constants were set experimentally.

For More Information On This Product,
Go to: www.freescale.com

Freescale Semiconductor, Inc.

5.4.6 Process Current PI Controller

The process is similar to the Speed controller. The **I_Dc_Bus** current is controlled based on the **U_Dc_Bus_Desired** Reference current. The current controller is processed only during Alignment stage.

The current controller works with a constant execution (sampling) period. determined by PWM frequency:

Current Controller period = 1/pwm frequency.

The PI controller is proportional and integral constants were set experimentally.

5.4.7 Process PWM Generation

The Process PWM Generation creates:

- the BLDC motor commutation pattern as described in section **3.2 Brushless DC Motor Control Theory**
- required duty cycle

5.4.8 Process Fault Control

The Process Fault Control is used for drive protection. It can be understood from **Figure 5-5**. The **DriveFaultStatus** is passed to the PWM Generation process and to the Application State Machine process in order to disable the PWMs and to control the application accordingly.

5.5 State Diagram

The state diagrams of the whole SW are described below.

5.5.1 Main SW States - General Overview

The SW can be split into following processes:

- Process Application State Machine

For More Information On This Product,
Go to: www.freescale.com
Freescale Semiconductor, Inc.

- Process Commutation Control
- Process Speed PI Controller
- Process Current PI Controller
- Process PWM Generation
- Process PWM Generation

as shown in **5.4 Data Flow**. The general overview of the software states is in the State Diagram - Process Application State Machine, which is the highest level (only the process Fault Control is on the same level because of the motor emergency stop).

The status of all the processes after reset is defined in **5.5.2 Initialize**.

5.5.2 Initialize

The Main software initialization provides the following actions:

- **CmdApplication** = 0
- **DriveFaultStatus** = NO_FAULT
- PCB Motor Set Identification
  - **boardId** function is used to detect one of three possible hardware sets. According to the used hardware, one of three control constant sets are loaded (functions **EVM_Motor_Settings, LV_Motor_Settings, HV_Motor_Settings**)
- ADC Initialization with Zero Crossing initialization
- LED diodes initialization
- Switch (Start/Stop) initialization
- Push Buttons (Speed up/down) initialization
- Commutation control initialization
- PWM initialization
- PWM fault interrupts initialization
- Output Compare Timers initialization

For More Information On This Product,
Go to: www.freescale.com

Freescale Semiconductor, Inc.

NOTE: *The EVM board can be connected to the power stage boards. In order to assure the right hardware is connected the board identification is performed. When inappropriate hardware is detected the* ***DriveFaultStatus****|=****WRONG_HARDWARE*** *is set, motor remains stopped!*

5.5.3 State Diagram - Process Application State Machine

Process Application State Machine state diagram is displayed in **Figure 5-7**. Application State Machine controls the main application functionality.

The application can be controlled:

- manually
- from PC Master

In manual control, the application is controlled with Start/Stop switch and Up Down Push buttons to set Required Speed.

In PC Master control mode the Start/Stop is controlled manually and the Required Speed is set via the PC Master.

The motor is stopped whenever the absolute value of Required speed is lower then Minimal Speed or switch set to stop or if there is a system failure - Drive Fault (Emergency Stop) state is entered. All the SW processes are controlled according this Application State Machine status.

Freescale Semiconductor, Inc.

For More Information On This Product,
Go to: www.freescale.com

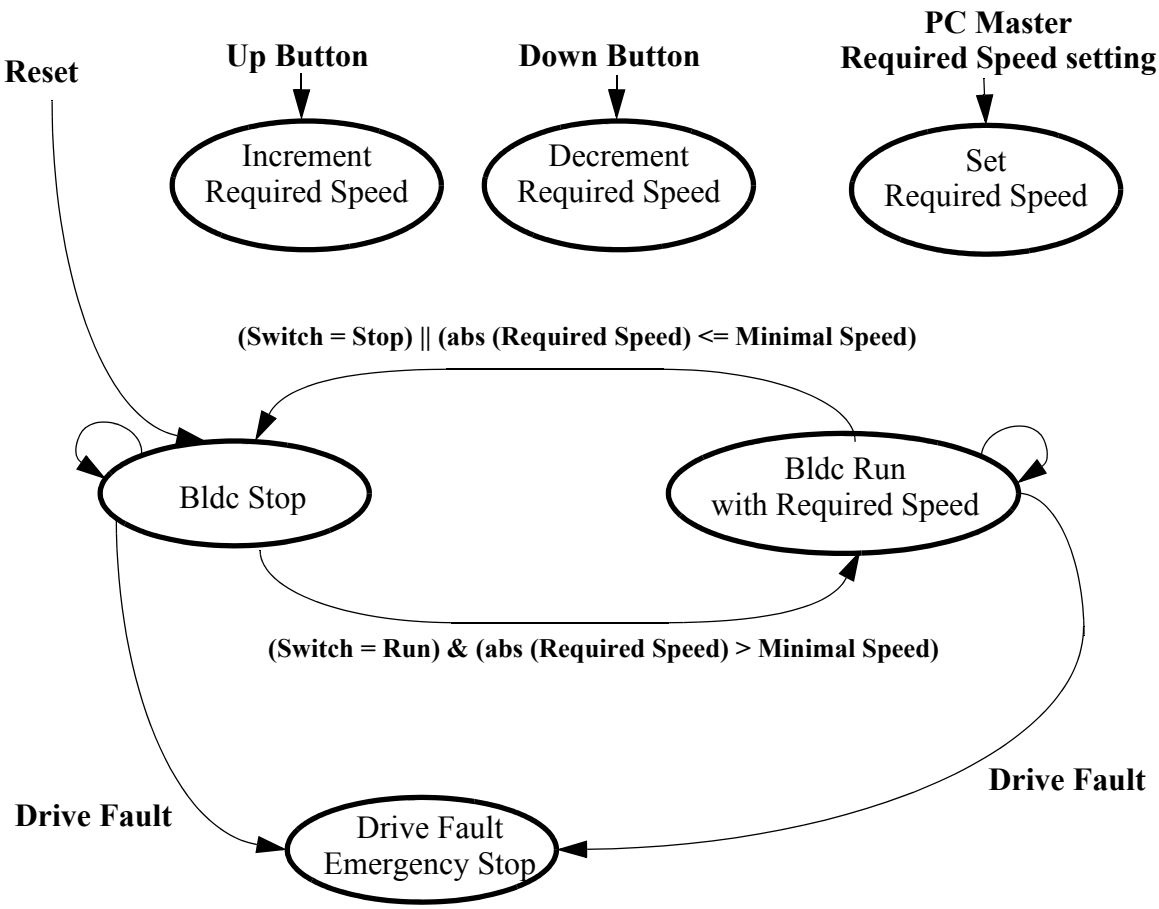

Figure 5-7. State Diagram - Process Application State Machine

5.5.4 State Diagram - Process Commutation Control

State Diagram of the process Commutation Control is shown in **Figure 5-8**. The Commutation Control process takes care of the sensorless BLDC motor commutation. The requirement to run the BLDC motor is determined by upper software level Application State Machine. When the Application State Machine is in BLDC Stop state, Commutation Control status is Stopped. If it is in BLDC Stop state, the Commutation Control goes through the states described in section **3.3 Control Technique**. So there are the following possible states:

- Alignment state

For More Information On This Product,
Go to: www.freescale.com

Freescale Semiconductor, Inc.

  - motor is powered with current through 2 phases - no commutations provided.
- Starting (Back-EMF Acquisition) State
  - motor is started with making first 2 commutations, then it is running as at Running state using Start parameters for commutation calculation **StartComputInit** (so the commutation advance angle and the **Per_Toff** time are different)
- Running state
  - motor is running with Run parameters for commutation calculation **RunComputInit**.
- Stopped state
  - motor is stopped with no power going to motor phases.

The drive starts by setting the Alignment state where the Alignment commutation step is set and Alignment state is timed. After the time-out the Starting state is entered with initialization of Back-EMF Zero Crossing algorithms for the Starting state. After the required number of successive commutations with correct Zero Crossing, the Running state is entered. The Running and Starting states are exited to the Stopped state, if the number of commutations with wrong Zero Crossing exceeds the Maximal number. The commutation control is determined by the variable **StatusCommutation**.

Freescale Semiconductor, Inc.

For More Information On This Product,
Go to: www.freescale.com

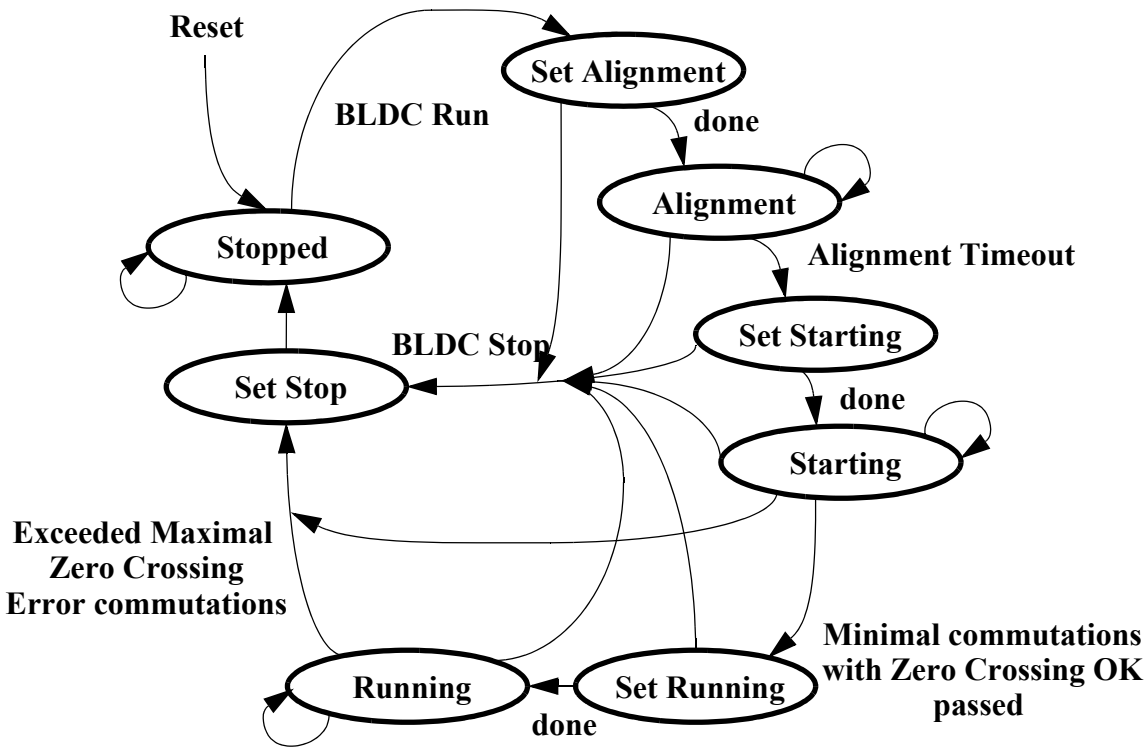

Figure 5-8. State Diagram - Process Commutation Control

5.5.4.1 Commutation Control - Running State

The State diagram of the Commutation Control Running state is shown in **Figure 5-9** and is explained in **3.3 Control Technique**. The selection of the state after the motor commutation depends on the detection of the Back-EMF Zero Crossing during the previous commutation period. If no Back-EMF Zero Crossing was detected, the commutation period is corrected (Corrective Calculation 1). Next, the Commutation time and commutation registers are preset. If Zero Crossing happens during the Per_Toff time period, the commutation period is corrected using the Corrective Calculation 2. When the commutation time expires, a new commutation is performed.

For More Information On This Product,
Go to: www.freescale.com

Freescale Semiconductor, Inc.

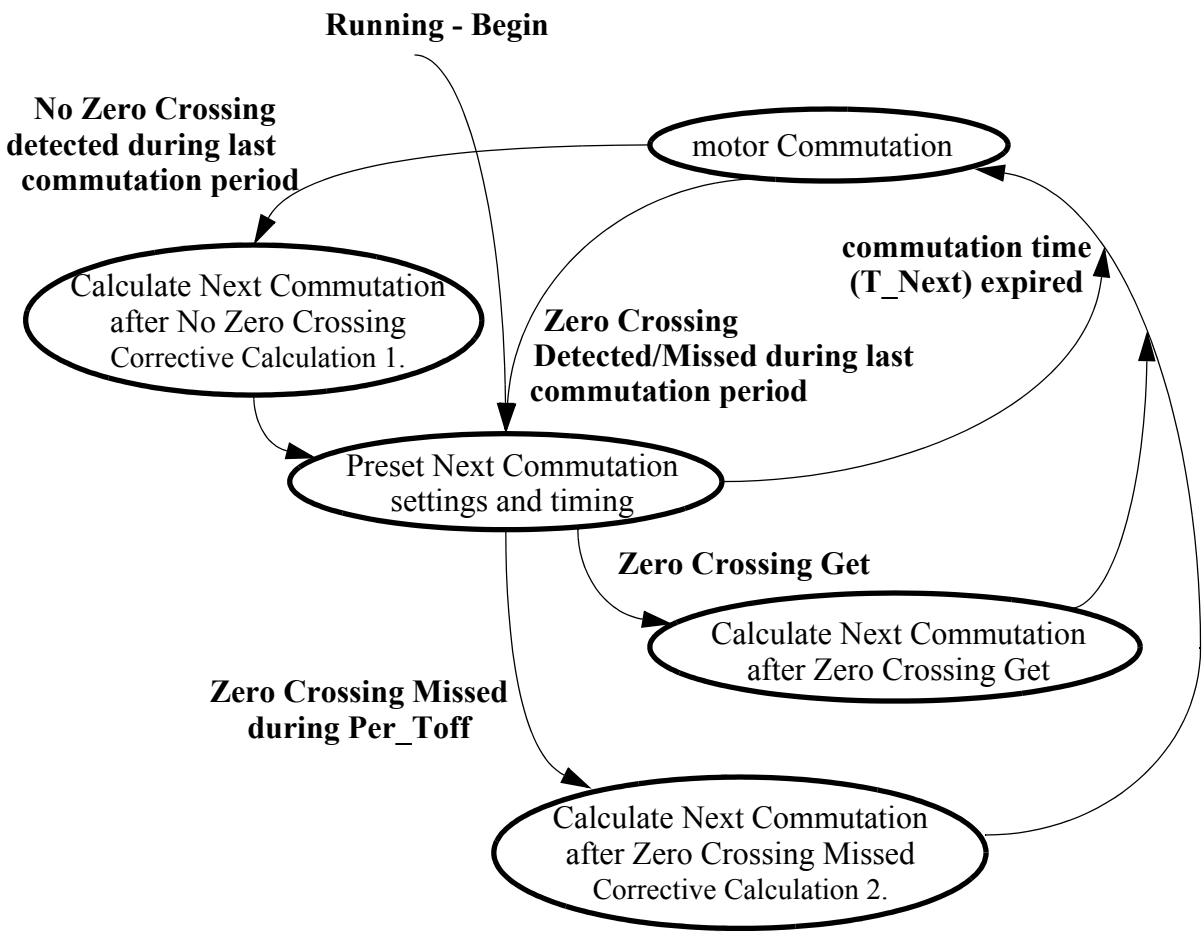

Figure 5-9. Substates - Running

This state is almost wholly serviced by the BLDC Zero Crossing algorithms which are documented in **Section 6. Software Algorithms**. First the **bldczcHndlr** is called with actual time from Cmt Timer Counter to control requests and commutation control registers. Other BLDC Zero Crossing algorithms are called, according to the request flags. The state services are located in main loop and in Cmt (commutation) Timer Interrupt.

5.5.4.2 Commutation Control - Starting state

The Starting state is as the the Running state as described in **Figure 5-9**.

For More Information On This Product,
Go to: www.freescale.com
Freescale Semiconductor, Inc.

5.5.4.3 Commutation Control - Set Running

This state services the transition from Starting (Back-EMF Acquisition) state to Running state by the BLDC Zero Crossing algorithms (see **6.3 BLDC Motor Commutation with Zero Crossing Sensing**) according to the following actions:

- T_Actual = Cmt Timer Counter
- setting new commutation parameters and initialized commutation with **bldczcHndlrInit** algorithm
- initialization of computation with **bldczcComputInit** algorithm

5.5.4.4 Commutation Control - Set Starting

This state is used to set the start of the motor commutation.

The following actions are performed in this state:

- commutation initialized to start commutation step and required direction
- 2 additional motor commutations are prepared (in order to create starting torque)
- setting commutation parameters and commutation handler initialization by **bldczcHndlrInit** algorithm
- first action from **bldczcHndlrInit** algorithm (for commutations algorithms) is timed by Output Compare Timer for Commutation timing control (OC Cmt)
- PWM is set according the above prepared motor commutation steps
- Zero Crossing is initialized by **bldcZCrosInit**
- Zero Crossing computation is initialized by **bldczcComputInit**
- Zero Crossing is Enabled

5.5.4.5 Commutation Control - Set Stop

In this state:

For More Information On This Product,
Go to: www.freescale.com

Freescale Semiconductor, Inc.

- **bldczcHndlrStop** algorithm is called
- PWM output pad is disabled in order to stop motor rotation and switch off the motor power supply

5.5.4.6 Commutation Control - Set Alignment

In this state BLDC motor is set to Alignment state, where voltage is put across 2 motor phases and current is controlled to be at required value. The following actions are provided in Set Alignment state:

- PWM set according to **Align_Step_Cmt** variable status
- current controller is initialized
- PWM output is enabled
- Alignment Time is timed by Output Compare Timer for Speed and Alignment

Freescale Semiconductor, Inc.

For More Information On This Product,
Go to: www.freescale.com

5.5.5 State Diagram - Process ADC Zero Crossing Checking

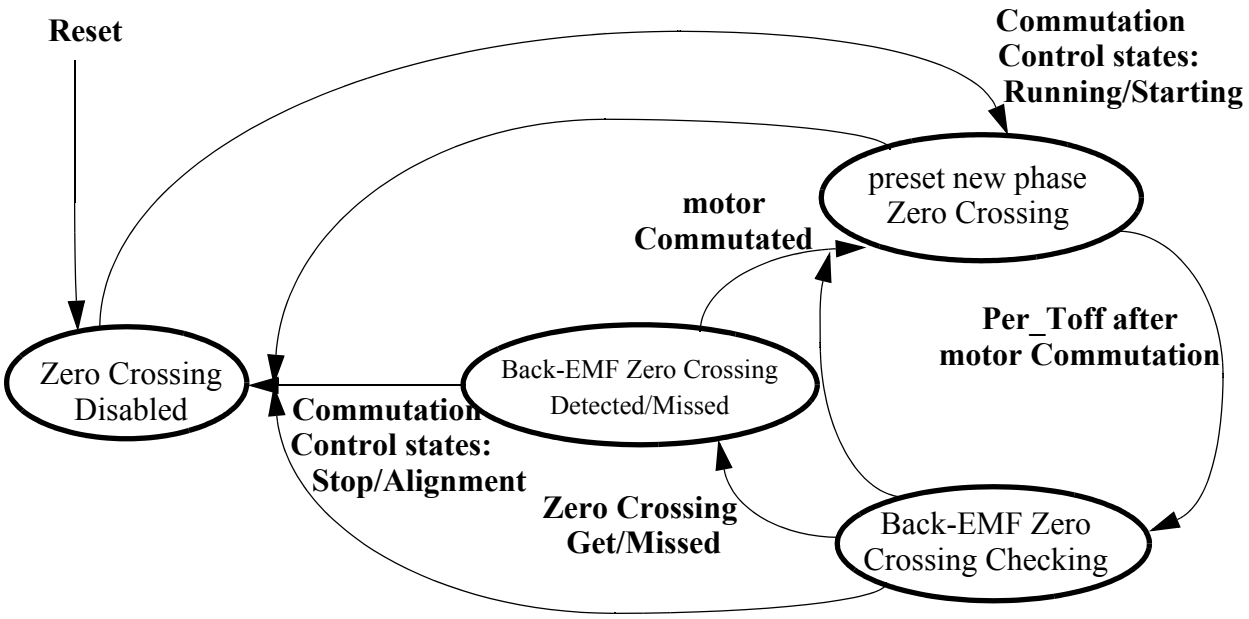

Figure 5-10. State Diagram - Process ADC Zero Crossing Checking

The status of the ADC Zero Crossing checking depends on Commutation Control states. It is enabled only during the Running and Starting Commutation Control states. When the BLDC motor is commuted, the new Zero Crossing phase is preset. When, after motor commutation, the time interval (Per_Toff) is passed, the Back-EMF Zero Crossing is checked. When the Back-EMF Zero Crossing is Detected or Missed, the Commutation control process is informed that a new commutation time needs to be computed.

This process is almost entirely provided by the BLDC Zero Crossing algorithms. The **bldczcHndlr** is called with actual time from the Cmt Timer Counter. This algorithm is assigned to control requests and set some commutation control registers. According to the request flags set by this algorithm, other BLDC Zero Crossing algorithms are called.

This process, together with the Commutation Control Running state, are the most important software processes for sensorless BLDC motor

For More Information On This Product,
Go to: www.freescale.com

Freescale Semiconductor, Inc.

commutation. These process services are located in the main loop and in the ADC Interrupt subroutine.

5.5.6 State Diagram - Process ADC Zero Crossing Offset Setting

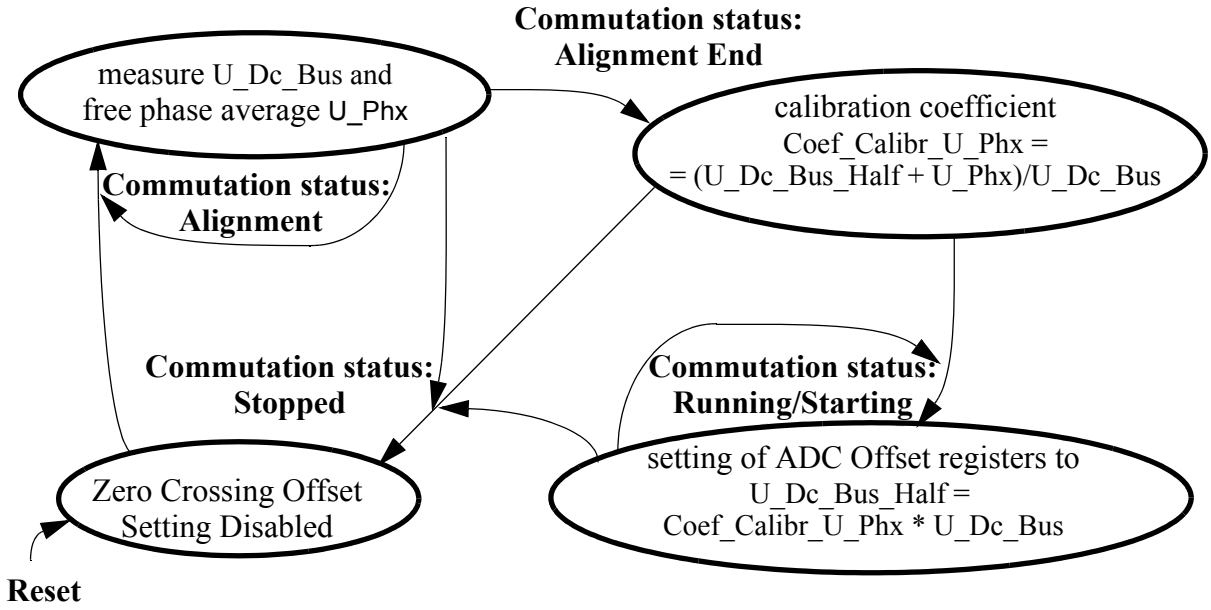

Figure 5-11. State Diagram - Process ADC Zero Crossing Offset Setting

The **Figure 5-11** state diagram describes the tuning process of the ADC (Zero Crossing) Offset Registers described in **3.3 Control Technique** and **5.4.4 Process Zero Crossing Offset Setting**.

Freescale Semiconductor, Inc.

For More Information On This Product,
Go to: www.freescale.com

5.5.7 State Diagram - Process Speed PI Controller

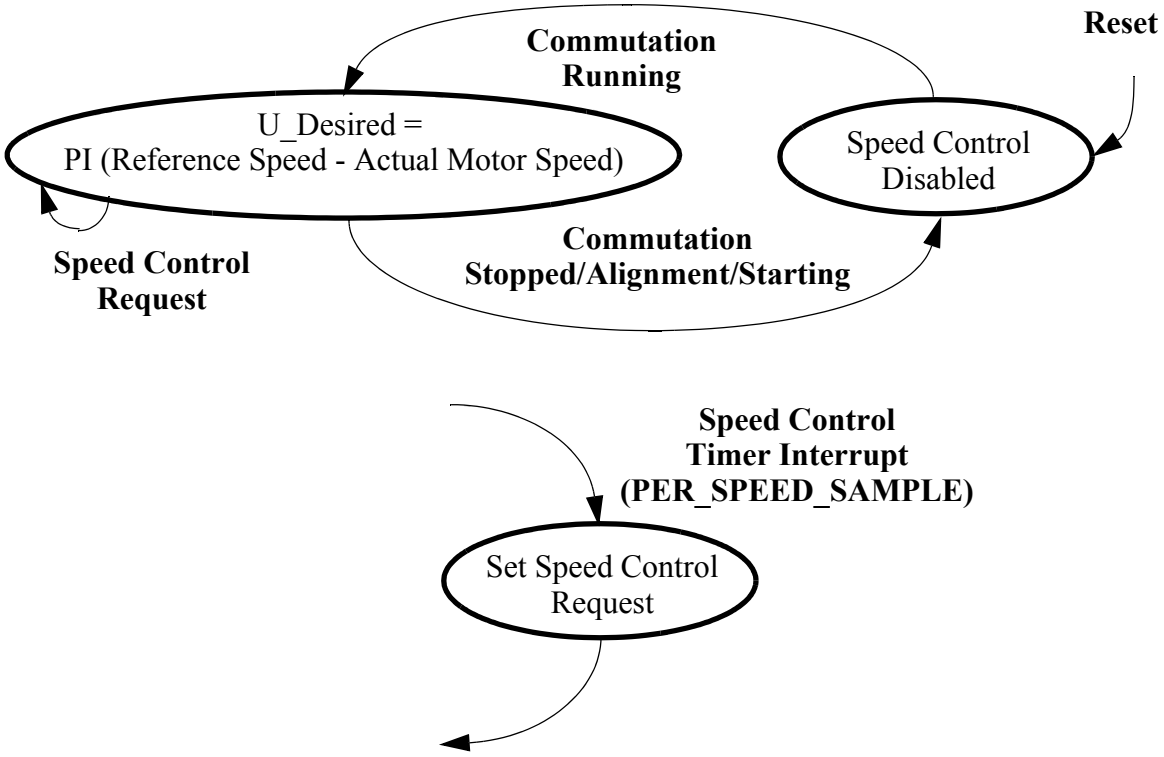

Figure 5-12. State Diagram - Process Speed PI Controller

The Speed PI controller algorithm **controllerPItype1** is described in the source code. The controller execution (sampling) period is **PER_SPEED_SAMPLE**, period of Speed Control Timer Interrupt.

Freescale Semiconductor, Inc.

For More Information On This Product,
Go to: www.freescale.com

5.5.8 State Diagram - Process Current PI Controller

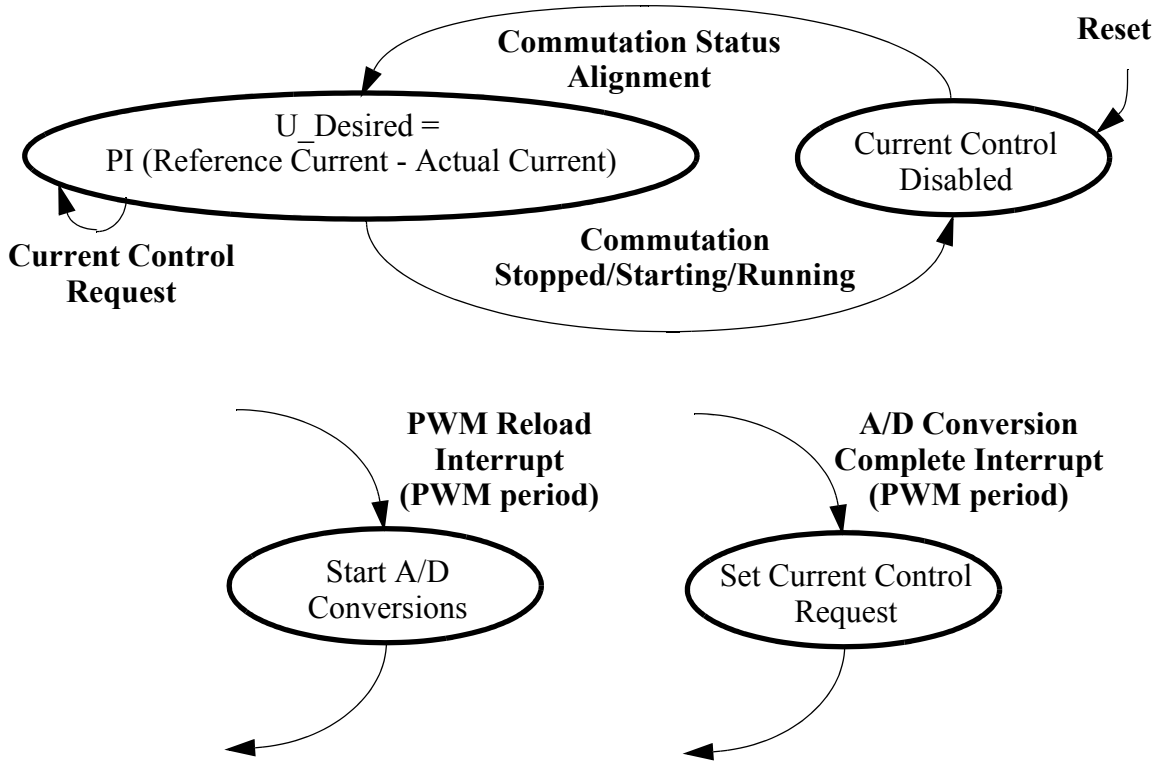

Figure 5-13. State Diagram - Process Speed PI Controller

The Current PI controller algorithm **controllerPItype1** is described in the source code. The controller execution (sampling) period is determined by the PWM module period, because the A/D conversion is started each PWM reload (once per PWM period). The Current Control Request is set in A/D Conversion Complete Interrupt.

5.5.9 State Diagram - Process Fault Control

The process Fault State is described by Interrupt subroutines which provide its functionality.

For More Information On This Product,
Go to: www.freescale.com
Freescale Semiconductor, Inc.

5.5.9.1 PWM Fault A Interrupt Subroutine

This subroutine is called at PWM A Fault Interrupt.

In this interrupt subroutine following faults from PWM Fault pins are processed:

- when Over-voltage occurs (the Over-voltage fault pin set)
  - **DriveFaultStatus** |= **OVERVOLTAGE**
- when Over-current occurs (the Over-current fault pin set)
  - **DriveFaultStatus** |= **OVERCURRENT**

5.5.9.2 ADC Low Limit Interrupt Subroutine

This subroutine is called when at least one ADC low limit is detected.

In this interrupt subroutine following low limit exceeds are processed:

- the undervoltage of the dc-bus voltage
  - DriveFaultStatus |= UNDERVOLTAGE_ADC_DCB
- the over temperature (detected here because of the sensor reverse temperature characteristic)
  - DriveFaultStatus |= OVERHEATING

5.5.9.3 ADC High Limit Interrupt Subroutine

This subroutine is called when at least one ADC high limit is exceeded.

In this interrupt subroutine following high limit exceeds are processed:

- the overvoltage of the dc-bus voltage
  - **DriveFaultStatus** |= **OVERVOLTAGE_ADC_DCB**
- the overcurrent of the dc-bus current input
  - **DriveFaultStatus** |= **OVERCURRENT_ADC_DCB**

For More Information On This Product,
Go to: www.freescale.com

Freescale Semiconductor, Inc.

Freescale Semiconductor, Inc.

For More Information On This Product,
Go to: www.freescale.com

Section 6. Software Algorithms

6.1 Contents

6.2 Introduction 103

6.3 BLDC Motor Commutation with Zero Crossing Sensing. 103

6.2 Introduction

This section describes algorithms that apply specifically to Brushless DC motor types. To give some more information, it shows not only the algorithms used in this reference design, but also some other simmilar algorithms, which are included in SDK softare pack (see **Appendix A. References**, **10**).

6.3 BLDC Motor Commutation with Zero Crossing Sensing

All algorithms for sensorless BLDC motor commutation control based on BEMF Zero Crossing have a name starting with *bldczc*. This set of algorithm-based functions can process BLDC motor sensorless commutation based on BEMF Zero Crossing detection. Some functions are to be called from the main software, while others care called from interrupt sub-routines.

6.3.1 Introduction

The algorithms for BLDC motor commutation with Zero Crossing sensing is a group of functions:

- bldczcHndlrInit
- bldczcHndlr

For More Information On This Product,
Go to: www.freescale.com

Freescale Semiconductor, Inc.

- bldczcTimeoutIntAlg
- bldczcHndlrStop
- bldczcComputInit
- bldczcComput
- bldczcCmtInit
- bldczcCmtServ
- bldczcZCrosInit
- bldczcZCrosIntAlg
- bldczcZCrosEdgeIntAlg
- bldczcZCrosServ
- bldczcZCrosEdgeServ

These algorithms cover essential processes for sensorless BLDC commutation:

- BEMF Zero Crossing detection - bldczcZCrosIntAlg, bldczcZCrosEdgeIntAlg, bldczcZCrosServ,bldczcZCrosEdgeServ, bldczcZCrosInit algorithms
- Commutation time calculation - bldczcComput, bldczcComputInit algorithms
- Commutation - bldczcCmtServ, bldczcCmtInit algorithms
- Interface between processes - bldczcHndlr, bldczcTimeoutIntAlg, bldczcHndlrInit, bldczcHndlrStop algorithms

Although the *bldczc* algorithms are not targeted for any concrete operating system, they were designed for multitasking.

From the function call perspective, the *bldczc* algorithms can be split into two groups:

- “Interrupt algorithms” - bldczcTimeoutIntAlg, bldczcZCrosIntAlg or bldczcZCrosEdgeIntAlg, which should be called inside of interrupts with highest priority to serve asynchronous and time synchronous actions with quick response.

For More Information On This Product,
Go to: www.freescale.com
Freescale Semiconductor, Inc.

- “Service functions” - bldczcZCrosServ, bldczcZCrosEdgeServ, bldczcCmtServ, bldczcZComput, etc. should be called from the main software to serve the commutation status according to their respective command variables. Cmd_ZCros, Cmd_Cmt, Cmd_Comput with slower response. These functions should be called after bldczcHndlr, when it sets the flags requesting their function calls.

BLDC commutation can be run very simply and can be multiplexed with other tasks (motor speed control, communication, PFC control etc.). It can also be realized with *bldczc* “Service functions” which are called periodically from a simple main routine loop that also serves the other tasks mentioned above (motor speed control, communication, PFC control etc.). The *bldczc* “Service functions” may also be called from an appropriate task arbiter, which can guarantee their function calls.

6.3.2 API Definition

This section defines the API for sensorless BLDC motor control with BEMF ZEro Crossing.

The header file *bldc.h* includes all required prototypes and structure/type definitions. File *bldc.h* is used for all BLDC motor control algorithms and includes *BldcZC.h*. The tables are defined in *bldcdrv.h,* which is also included in *bldc.h*.

Public Interface Functions:

```
Result bldczcHndlrInit ( bldczc_sStates *pStates,
                         bldczc_sTimes *pTimes,
                         UWord16 T_Actual,
                         UWord16 Start_PerProcCmt,
                         bldczc_eStartingMode Starting_Mode );

Result bldczcHndlr ( bldczc_sStates *pStates,
                     bldczc_sTimes *pTimes,
                     UWord16 T_Actual );

Result bldczcTimeoutIntAlg ( bldczc_sStates *pStates,
                             bldczc_sTimes *pTimes,
                             UWord16 T_Actual);

Result bldczcHndlrStop ( bldczc_sStates *pStates );
```


For More Information On This Product,
Go to: www.freescale.com

Freescale Semiconductor, Inc.

```
Result bldczcComputInit ( bldczc_sState_Comput *pState_Comput,
                          bldczc_sTimes *pTimes,
                          UWord16 Actual_Time,
                          bldczc_sComputInit *pComputInit );

Result bldczcComput (bldczc_sStateComput *pState_Comput,
                     bldczc_sTimes *pTimes);

Result bldczcCmtInit ( bldczc_sState_Cmt *pState_Cmt,
                       UWord16 Start_Step_Cmt,
                       bldczc_eDirection Direction );

Result bldczcCmtServ ( bldczc_sStateCmt *pState_Cmt );

Result bldczcZCrosInit ( bldczc_sStateZCros *pState_ZCros,
                         bldczc_sStateCmt *pState_Cmt,
                         Word16 Min_ZCrosOKStart_Ini,
                         Word16 Max_ZCrosErr_Ini );

Result bldczcZCrosIntAlg (bldczc_sState_ZCros *pState_ZCros,
                          UWord16 *T_ZCros,
                          UWord16 T_ZCSample,
                          UWord16 Sample_ZCInput);

Result bldczcZCrosEdgeIntAlg (bldczc_sStateZCros *pState_ZCros,
                              UWord16 *T_ZCros,
                              UWord16 T_ZCSample,
                              UWord16 Sample_ZCInput);

Result bldczcZCrosServ ( bldczc_sStateZCros *pState_ZCros,
                         bldczc_sStateCmt *pState_Cmt );

Result bldczcZCrosEdgeServ ( bldczc_sStateZCros *pState_ZCros,
                             bldczc_sStateCmt *pStateCmt );
```

Public Data Structures:

```
typedef struct
{
    UWord16             T_Cmt0;
    UWord16             T_Next;
    UWord16             T_ZCros;
    UWord16             T_ZCros0;
    UWord16             Per_Toff;
    UWord16             Per_CmtPreset;
    UWord16             Per_ZCros;
    UWord16             Per_ZCros0;
    UWord16             Per_ZCrosFlt;
    UWord16             Per_HlfCmt;
} bldczc_sTimes;    /* Bldc control Time dedicated variables */
```


For More Information On This Product,
Go to: www.freescale.com

Freescale Semiconductor, Inc.

```
typedef union
{
  struct
  {
    unsigned int CmtDone_Comput_RqFlag : 1; /* Commutation Done Comput Request Flag */
    unsigned int ZCOKGet_Comput_RqFlag : 1;/* Zero Cross OK Get Comput Request Flag*/
    unsigned int ZCMiss_Comput_RqFlag : 1; /*Zero Cross Missed Comput Request Flag */
    unsigned int CmtPreComp_CmdFlag : 1;  /* Commutation PreComputed Command Flag */
    unsigned int ToffComp_CmdFlag : 1;    /* Period Toff Computed Command Flag */
    unsigned int CmtComp_CmdFlag : 1;     /* Commutation Computed Command Flag */
    unsigned int ZC_ComputFlag : 1;       /* Zero Crossing Computed Flag */
    unsigned int Bit7 : 1;                /* RESERVED */
    unsigned int Bit8 : 1;                /* RESERVED */
    unsigned int Bit9 : 1;                /* RESERVED */
    unsigned int Bit10 : 1;               /* RESERVED */
    unsigned int Bit11 : 1;               /* RESERVED */
    unsigned int Bit12 : 1;               /* RESERVED */
    unsigned int Bit13 : 1;               /* RESERVED */
    unsigned int Bit14 : 1;               /* RESERVED */
    unsigned int Bit15 : 1;               /* RESERVED */
   } B;
 UWord16 W16;
} bldczc_uCmdComput;         /* BldcZC Comput functions Commands, Requests,
                                Status Flags variable */

typedef struct
{
    bldczc_uCmdComput  Cmd_Comput;   /* Comput Command variable */
    Word16             Coef_CmtPrecompLShft;
                                     /* Commutation time precomputation
                                       Coeficient Range */
    Frac16             Coef_CmtPrecompFrac;
                                     /* Commutation time precomputationCoeficient */
    Frac16             Coef_HlfCmt; /* Half commutation Coeficient */
    Frac16             Coef_Toff;   /* Toff Zero Crossing Coeficient */
    UWord16            Const_PerProcCmt;
                                     /* Maximal Period of Commutation Proceeding */
                                     /* time of motor coil reverse current */
    UWord16            Max_PerCmt;  /* Maximal Commutation Period */
} bldczc_sStateComput;       /* Bldc Timeout state Variables */
```


For More Information On This Product,
Go to: www.freescale.com

Freescale Semiconductor, Inc.

```
typedef union
{
  struct
   {
    unsigned int CmtDone_CmtServ_RqFlag;
                                      /* Commutation done CmtServ Request*/
    unsigned int Cmt_DrvRqFlag : 1;   /* Commutation Driver Request Flag */
    unsigned int CmtPreset_DrvRqFlag : 1;
                                      /* Preset new Commutation Driver Request Flag
                                     (not necessary for some commutation technique) */
    unsigned int DIRFlag : 1;         /* motor direction Flag */
    unsigned int CmtServ_CmdFlag : 1;/* Commutation served Command Flag */
    unsigned int CmtDone_CmdFlag : 1;/* Commutation Done Command Flag */
    unsigned int Bit6 : 1;            /* RESERVED */
    unsigned int Bit7 : 1;            /* RESERVED */
    unsigned int Bit8 : 1;            /* RESERVED */
    unsigned int Bit9 : 1;            /* RESERVED */
    unsigned int Bit10 : 1;           /* RESERVED */
    unsigned int Bit11 : 1;           /* RESERVED */
    unsigned int Bit12 : 1;           /* RESERVED */
    unsigned int Bit13 : 1;           /* RESERVED */
    unsigned int Bit14 : 1;           /* RESERVED */
    unsigned int Bit15 : 1;           /* RESERVED */
   } B;
 UWord16 W16;
} bldczc_uCmdCmt;                     /* BldcZC Cmt functions Commands,
                                         Requests, Status Flags variable */

typedef struct
{
    bldczc_uCmdCmt     Cmd_Cmt;       /* Commutation Command variable */
    UWord16            Step_Cmt;      /* Motor Commutation Step */
    UWord16            Step_Cmt_Next; /* Mext Motor Commutation Step */
} bldczc_sStateCmt;    /* Bldc Commutation state Variables */

typedef union
{
 struct
   {
    unsigned int ZCrosInt_EnblFlag : 1;
                                      /* Zero Crossing Enable Flag */
    unsigned int ZCInpMaskPreset_DrvRqFlag : 1;
                                      /* Preset Input Mask Driver Request Flag */
    unsigned int CmtDone_ZCrosServ_RqFlag : 1;
                                      /* Commutation Done
                                         Zero Cros Service Request Flag */
    unsigned int CmtProcEnd_ZCrosServ_RqFlag : 1;
                                      /* Commutation Proceeding End
                                         Zero Cros Service Request Flag */
    unsigned int CmtServ_ZCrosServ_RqFlag : 1;
                                      /* Commutation served
```


For More Information On This Product,
Go to: www.freescale.com

Freescale Semiconductor, Inc.

```
                                        Zero Cros Service Request Flag */
    unsigned int ZC_GetFlag : 1;      /* Zero Crossing Get Flag */
    unsigned int ZC_SoonFlag : 1;     /* Zero Crossing Soon (before Toff time) */
    unsigned int Cmt_ProcFlag : 1;    /* Commutation proceeding Flag */
                                      /* motor coil reverse current when switching */
    unsigned int ZC_ToffFlag : 1;     /* Zero Crossing off Time Flag */

    unsigned int ZCOKGet_CmdFlag : 1;/* Zero Crossing OK Get Command Flag */
    unsigned int ZCMiss_CmdFlag : 1; /* Zero Crossing missed Command Flag */
                                      /* (flag set when Zero Crossing before Toff) */
    unsigned int noZCErr_CmdFlag : 1;/* no Zero Crossing get between commutations */
    unsigned int ZCMissErr_CmdFlag : 1;/* Zero Crossing missed Error Command Flag */
    unsigned int CmtDone_ZCrosServ_CmdFlag : 1;
                                     /* Commutation Done Zero Cros Serv Command Flag */
    unsigned int CmtServ_ZCrosServ_CmdFlag : 1;
                                      /* after Commutation served Zero Cros
                                         Serviced Command Flag */
    unsigned int EndStart_ZCrosServ_CmdFlag : 1;
                                      /* End Start Up ZCros Serv Command Flag */
    unsigned int MaxZCrosErr_ZCrosServ_CmdFlag : 1;
                                      /* Zero Crossing Errors >= Max_ZCrosErr
                                         ZCros Serv Command Flag */
    unsigned int ZCInpSet_DrvRqFlag : 1;
                                      /* Set ZC Input Driver Request Flag */
    unsigned int ZCToffEnd_ZCrosServ_RqFlag : 1;
                                      /* Zero Crossing Time off End
                                         Zero Cros Service Request Flag   */
    unsigned int Expect_ZCInp_PositivFlag : 1;
                                      /* Expected Zero Crossing Input
                                         Positive Flag */
    unsigned int Expect_ZCInp_PositivNextFlag : 1;
                                      /* Next Expected Zero Crossing
                                         Input Positive Flag */
    unsigned int Bit21 : 1;           /* RESERVED */
    unsigned int Bit22 : 1;           /* RESERVED */
    unsigned int Bit23 : 1;           /* RESERVED */
    unsigned int Bit24 : 1;           /* RESERVED */
    unsigned int Bit25 : 1;           /* RESERVED */
    unsigned int Bit26 : 1;           /* RESERVED */
    unsigned int Bit27 : 1;           /* RESERVED */
    unsigned int Bit28 : 1;           /* RESERVED */
    unsigned int Bit29 : 1;           /* RESERVED */
    unsigned int Bit30 : 1;           /* RESERVED */
    unsigned int Bit31 : 1;           /* RESERVED */
   } B;
 UWord32 W32;
} bldczc_uCmdZCros;    /* BldcZC Zero Crossing functions Commands,
                          Requests, Status Flags variable */
```


For More Information On This Product,
Go to: www.freescale.com

Freescale Semiconductor, Inc.

```
typedef struct
{
    bldczc_uCmdZCros   Cmd_ZCros;        /* Zero Crossing Command variable */
    UWord16            Mask_ZCInp;       /* Zero Crossing Input Mask */
    UWord16            Mask_ZCInpNext;   /* Next step Zero Crossing Input Mask */
    UWord16            Expect_ZCInpNext; /* Zero Crossing Next Expected Value */
    UWord16            Expect_ZCInp;     /* Zero Crossing Expecte Value */
    Word16             Cntr_ZCrosOK;    /* Counter OK Zero Crossing commutations */
    Word16             Min_ZCrosOKStart;/* Minimal OK Zero Crossings
                                            for Start mode */
    Word16             Cntr_ZCrosErr;  /* Counter succesive Error Zero Crossing
                                           commutations */
    Word16             Max_ZCrosErr; /* Maximal Error Zero Crossing commutations*/
    UWord16            Index_ZC_Phase;  /* Zero Crossing phase Index */
    UWord16            Index_ZC_PhaseNext;/* Mext Zero Crossing phase Index */
} bldczc_sStateZCros;  /* Zero state Variables */


typedef union
{
 struct
   {
    unsigned int Comput_AlgoRqFlag : 1; /* bldczcComput Algorithm call Request Flag */
    unsigned int CmtServ_AlgoRqFlag : 1;
                                       /* bldczcCmtServ Algorithm call Request Flag */
    unsigned int ZCrosServ_AlgoRqFlag : 1;
                                      /* bldczcZcrosServ function call Request Flag */
    unsigned int Timer_DrvRqFlag : 1;    /* Setting Timer Driver Request Flag */
    unsigned int EndStartMode_HndlrCmdFlag : 1;
                                         /* End Start Mode Hndlr Command Flag*/
    unsigned int ToffComp_Timeout_InfoFlag : 1;
                                         /* Toff period Computed
                                         Information Flag */
    unsigned int StartMode_HndlrFlag : 1;/* Start Mode Flag */
    unsigned int Cmt_TimedFlag : 1;      /* Commutation Timed Flag */
    unsigned int CmtPreset_TimedFlag : 1; /* Commutation Preset (before Zero Crosing)
                                            Timed Flag */
    unsigned int CmtProc_TimedFlag : 1;  /* Commutation Proceeding Timed Flag */
    unsigned int ZCToff_TimedFlag : 1;    /* Zero Crossing Time off Timed Flag */
    unsigned int ZCPrepared_Timeout_InfoFlag : 1;
                                         /* Zero Crossing for next commutation
                                            Prepared Information Flag */
    unsigned int StepPrepared_Timeout_InfoFlag : 1;
                                         /* Cmt_Step register for next commutation
                                            Prepared Information Flag */
    unsigned int CmtProcEnd_CmdFlag : 1; /* Commutation Proceeding End Command Flag */
    unsigned int ZCToffEnd_CmdFlag : 1;  /* Zero Crossing Time off End Command Flag */
    unsigned int ZCToffTest_Hndlr_RqFlag : 1;
                                         /* Zero Crossing Toff passed Test
                                            (Toff Passed before Timer was set)
                                             Request Flag */
```


For More Information On This Product,
Go to: www.freescale.com

Freescale Semiconductor, Inc.

```
    unsigned int ZCToffStart_CmdFlag : 1; /* Started Command Flag */
    unsigned int CmtTest_Hndlr_RqFlag : 1;/* Commutation time Test handler
                                             Required Flag */
   unsigned int CmtTimedStart_CmdFlag : 1;/* Commutation Timing Started Command Flag*/
    unsigned int MaxZCrosErr_HndlrCmdFlag : 1;
                                        /* Maximal successive
                                       Zero Crossing Errors >= Max_ZCrosErr Command
                                           Flag */
    unsigned int Bit20 : 1;             /* RESERVED */
    unsigned int Bit21 : 1;             /* RESERVED */
    unsigned int Bit22 : 1;             /* RESERVED */
         ..............................................................
          ....................etc.....................................
    unsigned int Bit28 : 1;             /* RESERVED */
    unsigned int Bit29 : 1;             /* RESERVED */
    unsigned int Bit30 : 1;             /* RESERVED */
    unsigned int Bit31 : 1;             /* RESERVED */
   } B;
 UWord16 W16;
} bldczc_uCmdGeneral;                   /* BldcZC General functions Commands,
                                           Requests, Status Flags variable */
typedef struct
{
    bldczc_uCmdGeneral  Cmd_General;    /* General Command variable */
} bldczc_sStateGeneral;                 /* Bldc Timeout and Handler state Variables
*/

typedef struct
{
      bldczc_sStateComput    State_Comput;
      bldczc_sStateCmt          State_Cmt;
      bldczc_sStateZCros       State_ZCros;
      bldczc_sStateGeneral     State_General;
} bldczc_sStates;

typedef enum
{
 BLDCZC_SET_DEFAULT,
 BLDCZC_DO_NOT_EFFECT
} bldczc_eModeInit;

typedef enum
{
 BLDCZC_STARTING_M,
 BLDCZC_RUNNING_M
} bldczc_eStartingMode;

typedef enum
{
 BLDCZC_ACB,
 BLDCZC_ABC
```


For More Information On This Product,
Go to: www.freescale.com

Freescale Semiconductor, Inc.

```
} bldczc_eDirection;

typedef struct
{
 UWord16 *pStateCmt;
} bldczc_sZCrosInit;                    /* Bldc Comput Init Variables */


typedef struct
{
    UWord16    Const_PerProcCmt;     /* Maximal Period of Commutation Proceeding */
                                     /* time of motor coil reverse current */
    UWord16    Max_PerCmt;           /* Maximal Commutation Period */
    bldczc_eModeInit   Mode_CoefInit;
                                     /* BLDCZC_SET_DEFAULT/BLDCZC_DO_NOT_EFFECT
                                        Coef variables */

    Frac16    Coef_CmtPrecompLShft;  /* Commutation time precomputation
                                        Coeficient Range */
    Frac16    Coef_CmtPrecompFrac;  /* Commutation time precomputation Coeficient */
    Frac16    Coef_HlfCmt;           /* Half commutation Coeficient */
    Frac16    Coef_Toff;             /* Init Zero Crossing off time Coeficient */
    bldczc_eModeInit   Mode_StateComputInit;
                                     /* BLDCZC_SET_DEFAULT/BLDCZC_DO_NOT_EFFECT
                                        State_Comput variables
                                        at initialization */
    bldczc_eModeInit Mode_TimesInit; /* BLDCZC_SET_DEFAULT variables Times
                                        from Per_CmtStart /BLDCZC_DO_NOT_EFFECT  */
    UWord16          Per_CmtStart;   /* Start Commutation periode */
    UWord16          Per_ToffStart;  /* period zero crossing Toff at start */

} bldczc_sComputInit;                /* Bldc Comput Init Variables */
```

Members:

The data structure of *bldczc* functions is based on two main types: *bldczc_sTimes* and *bldczc_sStates*.

Table 6-1. *bldczc_sTimes* structure members

T_Cmt0	UWord16	Time of the last commutation
T_Next	UWord16	Time of the Next Timer event (for Timer setting)
T_ZCros	UWord16	Time of last Zero Crossing
T_ZCros0	UWord16	Time of previous Zero Crossing

For More Information On This Product,
Go to: www.freescale.com

Freescale Semiconductor, Inc.

Table 6-1. *bldczc_sTimes* structure members

Per_Toff	UWord16	Period of Zero Crossing off
Per_CmtPreset	UWord16	Preset Commutation Period from commutation to next commutation if no Zero Crossing captured
Per_ZCros	UWord16	Period between Zero Crossings (estimates required commutation period)
Per_ZCros0	UWord16	Previous Period between Zero Crossings
Per_ZCrosFlt	UWord16	Estimated Period of commutation filtered
Per_HlfCmt	UWord16	Period from Zero Crossing to commutation (“Half Commutation“)

The component variables of *bldczc_sTimes* are used to compute the correct commutation time with respect to the Zero Crossing. They are listed in **Table 6-1** and graphically represented in **Figure 6-1**. The figure also shows the principle of BLDC motor control with BEMF Zero Crossing described in **6.3.3.6 bldczcComput - BLDC ZC Computation**.

Freescale Semiconductor, Inc.

For More Information On This Product,
Go to: www.freescale.com

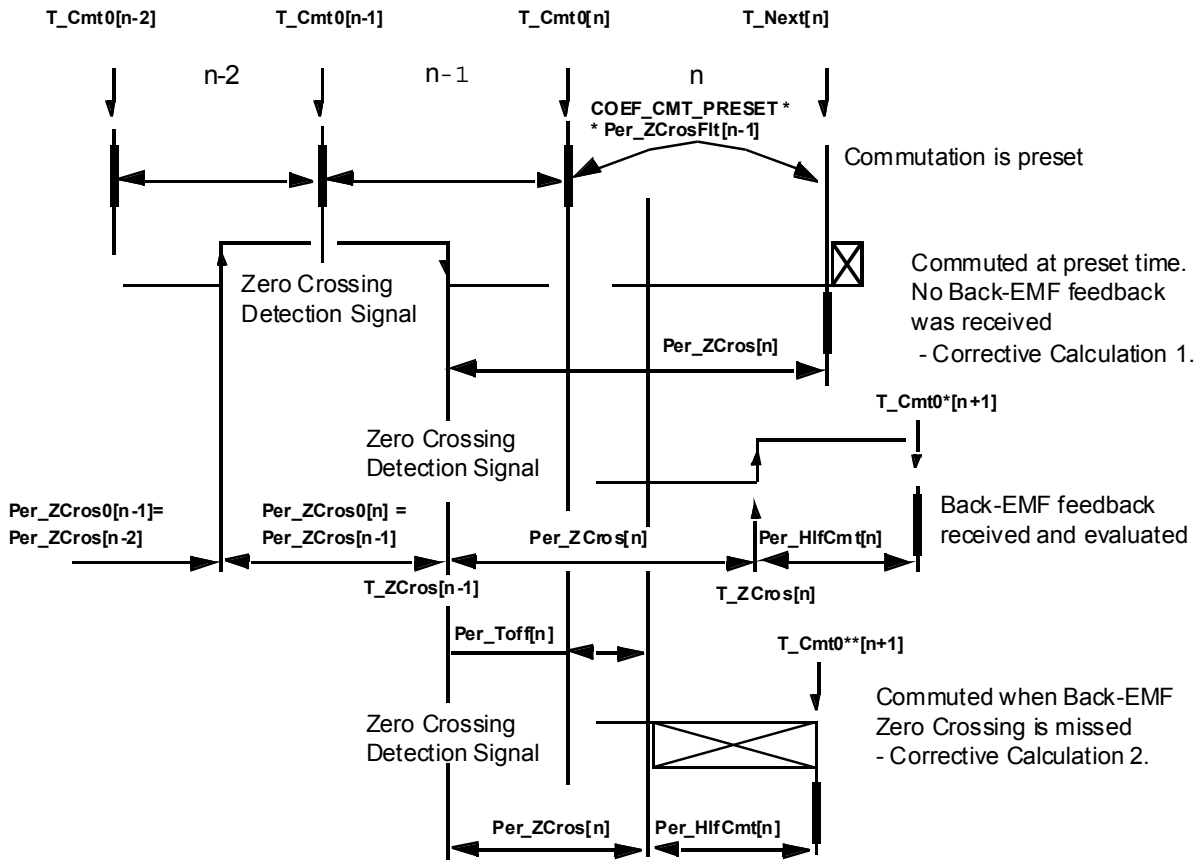

Figure 6-1. *bldczc_sTimes* Structure Members and BLDC Commutation with Zero Crossing Sensing

The *bldczc_sStates* consists of substructures *State_x* containing the registers for four groups of *bldczc* algorithms; its four members are listed in **Table 6-2**. All components contain Cmd registers with command (*_CmdFlag*) and request (*_RqFlag*) flags. Command flags are set in dedicated *bldczc* functions as information about a new stage. Request flags are tested as a request to serve a new stage by dedicated *bldczc* functions. The function *bldczcHndlr* is the interface between command and request flags.

For More Information On This Product,
Go to: www.freescale.com
Freescale Semiconductor, Inc.

Table 6-2. *bldczc_sStates* Structure Members

State_Comput	bldczc_sStateComput	State for computation functions (*bldczcComput, bldczcComputInit*)
State_Cmt	bldczc_sStateCmt	State for commutation functions (*bldczcCmtServ*, *bldczcTimeoutIntAlg* and *bldczcCmtInit*)
State_ZCros	bldczc_sStateZCros	State variables for Zero Crossing functions (*bldczcZCrosServ, bldczcZCrosEdgeServ bldczcZCrosIntAlg respectively bldczcZCrosEdgeIntAlg and bldczcZCrosInit*)
State_General	bldczc_sStateGeneral	General state variables (*bldczcHndlr*, *bldczcTimeout*, *bldczcHndlInit,bldczcHndlStop* and all functions)

The structure *bldczc_sState_Comput* is detailed in **Table 6-3**. The meaning of *Cmd_Comput* flags is shown by comments in *bldczc_uCmdComput* definitions.

Table 6-3. *bldczc_sStateComput* structure members

Cmd_Comput	bldczc_uCmdComput	Command, request flags variable for computation functions
Coef_CmtPrecompLShft	Word16	Coeficient for commutation precomputation; for scaling by Leftshift
Coef_CmtPrecompFrac	Frac16	Coefficient for commutation precomputation; fractional part
Coef_HlfCmt	Frac16	Coefficient for period from Zero Crossing to commutation (“Half Commutation“)
Coef_Toff	Frac16	Coefficient for period that commutation is turned “off”
Const_PerProcCmt	UWord16	Constant of period of commutation proceeding (maximal flyback current decay time)
Max_PerCmt	UWord16	Maximal commutation period

For More Information On This Product,
Go to: www.freescale.com

Freescale Semiconductor, Inc.

The structure *bldczc_sStateCmt* is detailed in **Table 6-4**. The meaning of *Cmd_Cmt* flags is shown by comments in *bldczc_uCmdCmt* definitions.

Table 6-4. *bldczc_sStateCmt* structure members

Cmd_Cmt	bldczc_uCmdCmt	Command, request flags variable for commutation functions
Step_Cmt	UWord16	Current step of BLDC motor commutation (0 - 5)
Step_Cmt_Next	UWord16	Next step of BLDC motor commutation (0 - 5)

The structure *bldczc_sStateZCros* is detailed in **Table 6-5**. The meaning of *Cmd_ZCros* flags is shown by comments in *bldczc_uCmdZCros* definitions.

Table 6-5. *bldczc_sStateZCros* structure members

Cmd_ZCros	bldczc_uCmdZCros	Command, request flags variable for Zero Crossing test functions
Mask_ZCInp	UWord16	Zero Crossing input mask
Mask_ZCInpNext	UWord16	Zero Crossing input mask for next commutation step
Expect_ZCInpNext	UWord16	Zero Crossing expected value for next commutation step
Expect_ZCInp	UWord16	Zero Crossing expected value
Cntr_ZCrosOK	Word16	Counter OK Zero Crossing commutations
Min_ZCrosOKStart	Word16	Minimal OK Zero Crossings for start mode
Cntr_ZCrosErr	Word16	Counter succesive error Zero Crossing commutations
Max_ZCrosErr	Word16	Maximal error Zero Crossing commutations

For More Information On This Product,
Go to: www.freescale.com
Freescale Semiconductor, Inc.

Table 6-5. *bldczc_sStateZCros* structure members

Index_ZC_Phase	UWord16	Zero Crossing phase Index (for *bldczcEdgeIntAlg*, *bldczcEdgeServ*)
Index_ZC_PhaseNext	UWord16	Next Zero Crossing phase Index (for *bldczcEdgeIntAlg*, *bldczcEdgeServ*)

The structure *bldczc_sStateGeneral* consists of only one variable, *Cmd_General*, with generally used command and request flags (for *bldczcHndlr* and *bldczcTimeoutIntAlg* algorithms).The structure is listed in Table 6-6.

Table 6-6. *bldczc_sStateGeneral* structure members

Cmd_General	bldczc_uCmdGeneral	Command, request flags variable generally used command and request flags

6.3.3 API Specification

This section specifies the exact use of each API function.

Function arguments for each routine are described as *in*, *out*, or *inout*. An *in* argument means that the parameter value is an input only to the function. An *out* argument means that the parameter value is an output only from the function. An *inout* argument means that a parameter value is an input to the function, but the same parameter is also an output from the function.

Typically, *inout* parameters are input pointer variables in which the caller passes the address of a preallocated data structure to a function. The function stores its results within that data structure. The actual value of the *inout* pointer parameter is not changed.

For More Information On This Product,
Go to: www.freescale.com

Freescale Semiconductor, Inc.

6.3.3.1 bldczcHndlrInit - Initialize BLDC ZC Handler

Call(s):

```
Result bldczcHndlrInit ( bldczc_sStates *pStates,
                         bldczc_sTimes *pTimes,
                         UWord16 T_Actual,
                         UWord16 Start_PerProcCmt,
                         bldczc_eStartingMode Starting_Mode );
```

Arguments:

Table 6-7. *bldczcHndlrInit* arguments

pStates	out	Pointer to structure with all *bldczc* state and command variables
pTimes	inout	Pointer to structure with all *bldczc* time variables
T_Actual	in	Variable containing *Actual Time*
Start_PerProcCmt	in	Starting period of commutation proceeding (maximal flyback current decay time)
Starting_Mode	in	*BLDCZC_STARTING_M* mode, *BLDCZC_RUNNING_M* mode

Description: The function *bldczcHndlrInit* initializes the BLDC motor Zero Crossing commutation structure to prepare BLDC motor commutation begin (motor start). When the *Starting_Mode* variable is set to *BLDCZC_STARTING_M*, function *bldczcHndlrInit* initializes a states and command variables data structure pointed by pointer *pState*s, which is used by *bldczc* functions. It also sets a times structure pointed by *pTimes.* The variables are set when *bldczcHndlr* sets, just after motor commutation (during motor running).

When the *Starting_Mode* variable is set to *BLDCZC_RUNNING_M*, the status variables are not initialized; only the running mode of commutation is set (pStates->State_General.Cmd_General.B.StartMode_HndlrFlag = 0).

Returns: The function *bldczcHndlrInit* returns:

"FAIL (-1)" => if an unexpected status of **pStates* structure

"PASS (0)" => otherwise

For More Information On This Product,
Go to: www.freescale.com

Freescale Semiconductor, Inc.

Range Issues: All time variables and components *T_x* in *pTimes* structure are to be computed as 16-bit rollover registers. If results overflow 16 bits, they are not saturated, but the overflow bit is ignored and a low 16 bits word is taken as a result. The *T_x* variables can then be used as outputs and inputs from a 16-bit past compare timer used as a system clock base.

Special Issues: The function *bldczcHndlrInit* should be called before any call to the function *bldczcHndlr*. Usually, *bldczcHndlrInit* is called to start motor commutations. Multiple calls may be made to *bldczcHndlrInit*, however, to initialize different *bldczcHndlr* functions which could be used concurrently. Call function *bldczcHndlrStop* to set the data structure *pState*s initialized by the function *bldczcHndlrInit* when BLDC motor commutation ends; this is generally an emergency stop.

Starting and running modes of commutation are almost identical. In the starting mode, the *bldczc* algorithms set *pStates->State_General.Cmd_General.B.EndStartMode_HndlrCmdFlag* flag. After the motor proceeds, *pStates->State_ZCros.Min_ZCrosOKStart* runs in row successive commutations, counted by the *pStates->State_ZCros.Cntr_ZCrosOK* variable. This functionality is implemented to enable use of different computation constants when the motor starts and then enters running phase.

Code Example 1*: bldczcHndlrInit*

```
#include "dspfunc.h"
#include "bldc.h"
       /* include BLDC motor with Zero Crossing sensing algorithms */

#define ALIGNMENT_STEP_CMT 0x05  /* Bldc Alignment (Start) commutation step index */
#define MIN_ZCROSOK_START  0x02  /* minimal Zero Crossing OK commutation
                                    to finish Bldc starting phase */
#define MAX_ZCROSERR   0x04      /* Maximal successive Zero Crossing Errors (to stop
                                              commutations) */

.....

static void CommutationSetStarting (bldczc_sStates *pStates,
                                    bldczc_sTimes *pTimes,
                                    bldczc_eDirection Direction,
                                    UWord16 Start_Step_Cmt,
                                    Word16 Min_ZCrosOKStart,
                                    Word16 Max_ZCrosErr);
```


For More Information On This Product,
Go to: www.freescale.com

Freescale Semiconductor, Inc.

```
static void CommutationSetRunning (bldczc_sStates *pStates,
                                   bldczc_sTimes *pTimes )

.....

static bldczc_sStates             BldcAlgoStates;
static bldczc_sTimes              BldcAlgoTimes;

.....

static const bldczc_sComputInit StartComputInit = {
    /* Const_PerProcCmt = */        CONST_PERPROCCMT,
    /* Max_PerCmt */                0x8000,

    /* Mode_CoefInit = */           BLDCZC_SET_DEFAULT,
    /* Coef_CmtPrecompLShft =  */   2,
    /* Coef_CmtPrecompFrac = */     FRAC16(0.5), /* final Coef_CmtPrecomp = 2 =
                                      Coef_CmtPrecompFrac << Coef_CmtPrecompLShft */
    /* Coef_HlfCmt = */             FRAC16(0.125), /* 1/8 */
    /* Coef_Toff = */               FRAC16(0.5),   /* 1/2 */
    /* Mode_State_ComputInit = */   BLDCZC_SET_DEFAULT,
    /* Mode_TimesInit = */          BLDCZC_SET_DEFAULT,
    /* Per_CmtStart = */            0x0c00,
                                                  /* Start Commutation period */
    /* Per_ToffStart = */           0x0c00


};

static const bldczc_sComputInit RunComputInit = {
    /* Const_PerProcCmt = */        CONST_PERPROCCMT,
    /* Max_PerCmt */                0x8000,

    /* Mode_CoefInit = */           BLDCZC_SET_DEFAULT,
    /* Coef_CmtPrecompLShft =  */   2,
    /* Coef_CmtPrecompFrac = */     FRAC16(0.5), /* final Coef_CmtPrecomp = 2 =
                                      Coef_CmtPrecompFrac << Coef_CmtPrecompLShft */
    /* Coef_HlfCmt = */             FRAC16(0.375), /* from 1/4 to 0.375 */
    /* Coef_Toff = */               FRAC16(0.25), /* 1/4 */
    /* Mode_State_ComputInit = */   BLDCZC_DO_NOT_EFFECT,
    /* Mode_TimesInit = */          BLDCZC_DO_NOT_EFFECT,
    /* Per_CmtStart = */            0x0400,
                                            /* Start Commutation period */
    /* Per_ToffStart = */           0x0100
};


.....

CommutationSetStarting ( &BldcAlgoStates, &BldcAlgoTimes,\
```


For More Information On This Product,
Go to: www.freescale.com

Freescale Semiconductor, Inc.

```
                          Dir_Cmt_Actual, Alignment_Step_Cmt,\
                          Min_ZCrosOK_Start, Max_ZCrosErr );

.....

static void CommutationSetStarting (bldczc_sStates *pStates,
                                    bldczc_sTimes *pTimes,
                                    bldczc_eDirection Direction,
                                    UWord16 Start_Step_Cmt,
                                    Word16 Min_ZCrosOKStart,
                                    Word16 Max_ZCrosErr)
{
 UWord16 T_Actual;

 bldczcCmtInit ( &pStates->State_Cmt, Start_Step_Cmt, Direction );
 pStates->State_Cmt.Cmd_Cmt.B.CmtDone_CmtServ_RqFlag = 1;
 bldczcCmtServ ( &pStates->State_Cmt );
  /* first step shift */
 pStates->State_Cmt.Step_Cmt = pStates->State_Cmt.Step_Cmt_Next;
 pStates->State_Cmt.Cmd_Cmt.B.CmtDone_CmtServ_RqFlag = 1;
 bldczcCmtServ ( &pStates->State_Cmt);
  /* second step shift */
 pStates->State_Cmt.Step_Cmt = pStates->State_Cmt.Step_Cmt_Next;
  /* Enable commutation timer */
 ioctl (TimerOC_CmtFD, QT_ENABLE, (void*)&quadParamCmt );
 T_Actual = ioctl(TimerOC_CmtFD, QT_READ_COUNTER_REG, 0 );
 bldczcHndlrInit ( pStates, pTimes, T_Actual, CONST_PERPROCCMT,  BLDCZC_STARTING_M );
 if ( pStates->State_General.Cmd_General.B.Timer_DrvRqFlag == 1)
    {
     /* set timer to time Cmt Procceeding */
     ioctl (TimerOC_CmtFD, QT_WRITE_COMPARE_VALUE1, pTimes->T_Next );
     pStates->State_General.Cmd_General.B.Timer_DrvRqFlag = 0;
    };
 Bldc_Cmt_PWM ( pStates->State_Cmt.Step_Cmt );
 /* clear Commutation Driver Request Flag */
 pStates->State_Cmt.Cmd_Cmt.B.Cmt_DrvRqFlag = 0;
 Result bldczcZCrosInit ( bldczc_sStateZCros *pState_ZCros,
                          bldczc_sStateCmt *pState_Cmt,
                          Word16 Min_ZCrosOKStart_Ini,
                          Word16 Max_ZCrosErr_Ini );
 bldczcComputInit ( &pStates->State_Comput,
       &BldcAlgoTimes, T_Actual, &StartComputInit );
 pwmIoctl(PwmFD, PWM_RELOAD_INTERRUPT, PWM_ENABLE, BSP_DEVICE_NAME_PWM_A);
       /* enable pwm reload interrupt where bldczcIntAlg is placed */
}

....

static void CommutationSetRunning (bldczc_sStates *pStates, bldczc_sTimes *pTimes )
{
 UWord16 T_Actual;
```


For More Information On This Product,
Go to: www.freescale.com

Freescale Semiconductor, Inc.

```
 T_Actual = ioctl(TimerOC_CmtFD, QT_READ_COUNTER_REG, 0 );
 bldczcHndlrInit ( pStates, pTimes, T_Actual, Const_PerProcCmt,  BLDCZC_RUNNING_M );
 bldczcComputInit(&pStates->State_Comput, &BldcAlgoTimes, T_Actual, &RunComputInit );
}


....
```

6.3.3.2 bldczcHndlr - BLDC ZC Handler

Call(s):

```
Result bldczcHndlr ( bldczc_sStates *pStates,
                     bldczc_sTimes *pTimes,
                     UWord16 T_Actual );
```

Arguments:

Table 6-8. *bldczcHndlr* arguments

pStates	out	Pointer to structure with all *bldczc* state and command variables
pTimes	inout	Pointer to structure with all *bldczc* time variables
T_Actual	in	Variable containing *Actual Time*

Description: The function *bldczcHndlr* is a command interface between software modules and the *State_Comput, State_Cmt, State_ZCros, State_General* data structures.

It prepares required actions and their timing according to command flags in *Cmd_ZCros, Cmd_Cmt, Cmd_Comput, Cmd_General*. It sets the correct request flags *xx_RqFlag* when dedicated command flags *xx_CmdFlag* are set. When *bldczcHndlr* serves the command flags *xx_CmdFlag,* it clears them.

The *bldczcHndlr* function controls calls of the *bldczc* functions. When *bldczcHndlr* sets *xx_AlgoRq* (*bldczc* algorithms requests), then the required *bldczcxx* function should be called by the application.

For More Information On This Product,
Go to: www.freescale.com
Freescale Semiconductor, Inc.

Also, *bldczcHndlr* handles timing, preparing the value for the next required time-out in *pTimes->T_Next* variable, and setting *Timer_DrvRqFlag* (Timer Request) in *Cmd_General* register. The timer control driver with *Times->T_Next* should be called in the main software whenever the timer request, *Timer_DrvRqFlag*, is set. The function *bldczcHndlr* also sets other flags according to the commutation status.

Returns: The function *bldczcHndlr* returns:

"FAIL (-1)" => if unexpected status of **pStates* structure

"PASS (0)" => otherwise

Range Issues: All time variables and components *T_x* in *pTimes* structure are to be computed as 16-bit rollover registers. If results overflow 16 bits, they are not saturated, but the overflow bit is ignored and a low 16 bits word is taken as a result. The *T_x* variables can be used as outputs and inputs from a 16 bit past compare timer used as a system clock base.

Special Issues: The *bldczcHndlr* function is intended to be called periodically from a main routine and can be called from a main routine loop with the sequence of main service functions (motor speed control, PFC control service, communication service). The *bldczc* functions were also designed to be used for multitasking if *bldczcHndlr* is called from an appropriate task arbiter.

The timer control driver with next *T_Next* should be called in the main software whenever timer request, *Timer_Rq,* is set.

Code Example 2*:* bldczcHndlr

```
#include "dspfunc.h"
#include "bldc.h"
       /* include BLDC motor with Zero Crossing sensing algorithms */
.....

static void BldcRunning ( bldczc_sStates *pStates, bldczc_sTimes *pTimes );

static bldczc_sStates             BldcAlgoStates;
static bldczc_sTimes              BldcAlgoTimes;

.....
```


For More Information On This Product,
Go to: www.freescale.com

Freescale Semiconductor, Inc.

```
BldcRunning ( &BldcAlgoStates, &BldcAlgoTimes );
       /* function call */
.....

static void BldcRunning ( bldczc_sStates *pStates, bldczc_sTimes *pTimes )
{
 UWord16 T_Actual;
 /* read commutation timer Actual Counter Value */
 T_Actual = ioctl(TimerOC_CmtFD, QT_READ_COUNTER_REG, 0 );

 bldczcHndlr ( pStates, pTimes, T_Actual );
 if ( pStates->State_General.Cmd_General.B.Timer_DrvRqFlag == 1)
    {
     ioctl (TimerOC_CmtFD, QT_WRITE_COMPARE_VALUE1, pTimes->T_Next );
     pStates->State_General.Cmd_General.B.Timer_DrvRqFlag = 0;
    };
 if ( pStates->State_General.Cmd_General.B.CmtServ_AlgoRqFlag == 1 )
    {
     bldczcCmtServ ( &pStates->State_Cmt );
     pStates->State_General.Cmd_General.B.CmtServ_AlgoRqFlag = 0;
    };
 if ( pStates->State_General.Cmd_General.B.ZCrosServ_AlgoRqFlag == 1)
    {
     bldczcZCrosServ ( &pStates->State_ZCros, &pStates->State_Cmt );
     pStates->State_General.Cmd_General.B.ZCrosServ_AlgoRqFlag = 0;
    };
 if ( pStates->State_General.Cmd_General.B.Comput_AlgoRqFlag == 1)
    {
     bldczcComput (&pStates->State_Comput, pTimes );
     pStates->State_General.Cmd_General.B.Comput_AlgoRqFlag = 0;
    };
}

.....
```

6.3.3.3 bldczcTimeoutIntAlg - BLDC ZC Time-out Interrupt Algorithm

Call(s):

```
Result bldczcTimeoutIntAlg ( bldczc_sStates *pStates,
                             bldczc_sTimes *pTimes,
                             UWord16 T_Actual);
```

Arguments:

For More Information On This Product,
Go to: www.freescale.com

Freescale Semiconductor, Inc.

Table 6-9. *bldczcTimeoutIntAlg* arguments

pStates	out	Pointer to structure with all *bldczc* state and command variables
pTimes	inout	Pointer to structure with all *bldczc* time variables
T_Actual	in	Variable containing *Actual Time*

Description: The *bldczcTimeoutIntAlg* Interrupt Algorithm is intended to be called from the Timer interrupt. *bldczcTimeoutIntAlg* has (with *bldczcHndlr*) the functionality of a command interface between software modules and the *State_Comput, State_Cmt, State_ZCros, State_General* data structures.It sets *pStates* status variables for *bldczcHndlr* and other *bldczc* functions according to the status of each time-out.

When motor commutation is needed (timed out), the *bldczcTimeoutIntAlg* sets *Cmt_DrvRqFlag* flag in the *Cmd_Cmt* command variable .This flag is intended to be used by the application as a request for the BLDC motor commutation.

handles timing, preparing the value for the next required time-out in *pTimes->T_Next* variable, and setting *Timer_DrvRqFlag* (Timer Request) in *Cmd_General* register. The timer control driver with *T_Next* should be called in the main software whenever the timer request, *Timer_DrvRqFlag*, is set.

The *bldczcTimeoutIntAlg* handles three essential events: motor commutation timeout, commutation proceeding timeout (flyback current decay) and Zero Crossing Time Off (the time when BEMF Zero Crossing is not sensed) timeout. These events are differentiated by the flags *Cmt_TimedFlag, CmtProc_TimedFlag,* or *ZCToff_TimedFlag,* respectively, and are shown in **Table 6-10**. Timing of these events is set inside of this function, or inside of *bldczcHndlr*, by preparing the value for the next required timeout in *pTimes->T_Next* variable. The timer control driver with *Times->T_Next* should be called by the application software whenever the timer request, *Timer_DrvRqFlag*, is set.

For More Information On This Product,
Go to: www.freescale.com

Freescale Semiconductor, Inc.

Table 6-10. *bldczcTimeoutIntAlg* events

Cmt_TimedFlag = 1	Commutation timed	Sets *pTimes->T_Cmt0* = T_Actual Sets *Cmt_ProcFlag = 1, ZC_ToffFlag = 1* Sets commutation required *Cmt_DrvRqFlag = 1* and prepares timing of commutation proceeding pTimes->T_Next = T_Actual + Const_PerProcCmt
CmtProc_TimedFlag = 1	Commutation proceeding timed (flyback current decay)	Clears *Cmt_ProcFlag = 0* Sets *CmtProcEnd_CmdFlag* = 1 Prepares timing of pTimes->T_Next=pTimes->T_Next
ZCToff_TimedFlag = 1	Zero Crossing time off timed	Clears *ZC_ToffFlag = 0* Sets *ZCToffEnd_CmdFlag* = 1

Returns: The function *bldczcTimeoutIntAlg* returns:

"FAIL (-1)" => if unexpected status of **pStates* structure

"PASS (0)" => otherwise

Range Issues: All the time variables and components *T_x* in *pTimes* structure are to be computed as 16-bit rollover registers. If results overflow 16 bits, they are not saturated, but the overflow bit is ignored and a low 16 bits word is taken as a result. The *T_x* variables can be used as outputs and inputs from a 16-bit past compare timer used as a system clock base.

Special Issues: The *bldczcTimeoutIntAlg* function is intended to cooperate with the *bldczcHndlr* function.

The bldczcTimeoutIntAlg should be called as an interrupt algorithm from timer interrupt service routines with highest priority. Calling bldczcHndlr from the main software is lower priority and how bldczcHndlr is called depends on the system. It may be called from the main software loop as part of the sequence of tasks or it may be called by an arbiter with multitasking.

The *bldczcTimeoutIntAlg* algorithm is initialized by the function *bldczcHndlrInit.*

For More Information On This Product,
Go to: www.freescale.com
Freescale Semiconductor, Inc.

Code Example 3*: bldczcTimeoutIntAlg*

```
#include "dspfunc.h"
#include "bldc.h"
       /* include BLDC motor with Zero Crossing sensing algorithms */
.....

static void Bldc_Cmt_PWM (UWord16 Step_Cmt);
static void CallbackTimerOC_Cmt (void);

.....

static bldczc_sStates             BldcAlgoStates;
static bldczc_sTimes              BldcAlgoTimes;

.....
/*****************************************************************/
/*** Quadrature Timer parameters setting as an Output Compare ****/
/*** with CallbackTimerOC_Cmt called at Compare ******************/
/*****************************************************************/

static const qt_sState quadParamCmt = {

    /* Mode = */                    qtCount,
    /* InputSource = */             qtPrescalerDiv64,   /* 1.825us */
    /* InputPolarity = */           qtNormal,
    /* SecondaryInputSource = */    0,

    /* CountFrequency = */          qtRepeatedly,
    /* CountLength = */             qtPastCompare,
    /* CountDirection = */          qtUp,

    /* OutputMode = */              qtAssertWhileActive,
    /* OutputPolarity = */          qtNormal,
    /* OutputDisabled = */          0,

    /* Master = */                  0,
    /* OutputOnMaster = */          0,
    /* CoChannelInitialize = */     0,
    /* AssertWhenForced = */        0,

    /* CaptureMode = */             qtDisabled,

    /* CompareValue1 = */           PER_START_TIMEROC_CMT, /* ! */
    /* CompareValue2 = */           0,
    /* InitialLoadValue = */        0,

    /* CallbackOnCompare = */       { CallbackTimerOC_Cmt, 0 },
    /* CallbackOnOverflow = */      { 0, 0 },
    /* CallbackOnInputEdge = */     { 0, 0 }
};
```


For More Information On This Product,
Go to: www.freescale.com

Freescale Semiconductor, Inc.

```
.....

TimerOC_CmtFD = open(BSP_DEVICE_NAME_QUAD_TIMER_A_2, 0, &quadParamCmt );
       /* Open Commutation timer */

.....

ioctl (TimerOC_CmtFD, QT_ENABLE, (void*)&quadParamCmt );
       /* Enable commutation timer */

.....

/*******************************************************/
/*** Commutation timer interrupt callback function ****/
/*******************************************************/
static void CallbackTimerOC_Cmt (void)
{
 UWord16 T_Actual;
 T_Actual = ioctl(TimerOC_CmtFD, QT_READ_COUNTER_REG, 0 );
 bldczcTimeoutIntAlg ( &BldcAlgoStates, &BldcAlgoTimes , T_Actual );
 /* if Timer commutation required from bldczcTimeoutIntAlg() */
 if (BldcAlgoStates.State_Cmt.Cmd_Cmt.B.Cmt_DrvRqFlag == 1)
     {
      Bldc_Cmt_PWM ( BldcAlgoStates.State_Cmt.Step_Cmt );
        /* commutate Bldc motor */
      BldcAlgoStates.State_Cmt.Cmd_Cmt.B.Cmt_DrvRqFlag = 0;
     }
 /* if Timer setting required from bldczcTimeoutIntAlg() */
 if ( BldcAlgoStates.State_General.Cmd_General.B.Timer_DrvRqFlag == 1 )
    {
     ioctl (TimerOC_CmtFD, QT_WRITE_COMPARE_VALUE1, BldcAlgoTimes.T_Next );
       /* set new Timer event */
     BldcAlgoStates.State_General.Cmd_General.B.Timer_DrvRqFlag = 0;
    }
};

.....

/****************************************/
/*** Bldc motor commutation function ****/
/****************************************/
static void Bldc_Cmt_PWM (UWord16 Step_Cmt)
{
    PWMState = BldcZC_Cmt_StepTable [ Step_Cmt ];
       pwmIoctl (PwmFD, PWM_SET_CHANNEL_MASK, PWMState, BSP_DEVICE_NAME_PWM_A);
}

.....
```


For More Information On This Product,
Go to: www.freescale.com

Freescale Semiconductor, Inc.

6.3.3.4 bldczcHndlrStop - Stop BLDC ZC Handler

Call(s):

```
Result bldczcHndlrStop ( bldczc_sStates *pStates );
```

Arguments:

Table 6-11. *bldczcHndlrStop* arguments

pStates	out	Pointer to structure with all *bldczc* state and command variables

Description: The function *bldczcHndlrStop* sets the data structure *bldczc_sStates*, pointed by *pStates* to stop state of *bldczcHndlr*.It is intended to be used to stop BLDC commutation (e.g. for an application emergency stop).

Returns: The function *bldczcHndlrStop* returns:

"FAIL (-1)" => if unexpected status of **pStates* structure

"PASS (0)" => otherwise

Range Issues: None

Special Issues: Call *bldczcHndlrStop* when the motor needs to halt the commutation started by *bldczcHndlrInit;* this process is most commonly used for an emergency stop condition.

Code Example4: *bldczcHndlrStop*

```
#include "dspfunc.h"
#include "bldc.h"
       /* include BLDC motor with Zero Crossing sensing algorithms */


.....

static bldczc_sStates              BldcAlgoStates;
static bldczc_sTimes               BldcAlgoTimes;

.....

BldcSetStop ( &BldcAlgoStates );
```


For More Information On This Product,
Go to: www.freescale.com

Freescale Semiconductor, Inc.

```
.....

static void BldcSetStop ( bldczc_sStates *pStates )
{
 bldczcHndlrStop ( pStates );
 pwmIoctl(PwmFD, PWM_OUTPUT_PAD, PWM_DISABLE, BSP_DEVICE_NAME_PWM_A);
 pwmIoctl(PwmFD, PWM_RELOAD_INTERRUPT,    PWM_DISABLE, BSP_DEVICE_NAME_PWM_A);
 ioctl (TimerOC_CmtFD, QT_DISABLE, (void*)&quadParamCmt );  /* Disable commutation
timer */
}

.....
```

6.3.3.5 bldczcComputInit - Initialize BLDC ZC Computation

Call(s):

```
Result bldczcComputInit ( bldczc_sStateComput *pState_Comput,
                          bldczc_sTimes *pTimes,
                          UWord16 T_Actual,
                          bldczc_sComputInit *pComputInit );
```

Arguments:

Table 6-12. *bldczcComputInit* arguments

pState_Comput	out	Pointer to structure with computation state and command variables
pTimes	out	Pointer to structure with all *bldczc* time variables
T_Actual	in	Variable containing *Actual Time*
pComputInit	in	Pointer to compute initialization structure

Description: The *bldczcComputInit* function is used to initialize the *bldczc_sData* data structure, pointed by *pData* pointer for *bldczcComput.* It should be called when initialization for BLDC motor commutation begins. This function sets *pState_Comput* command variables and the time and period variables in the data structure pointed by *pTimes.*

Returns: The function *bldczcComputInit* returns:

"FAIL (-1)" => if unexpected status of **pState_Comput* structure

"PASS (0)" => otherwise

For More Information On This Product,
Go to: www.freescale.com

Freescale Semiconductor, Inc.

Range Issues: All the time variables and components T_x in *pTimes* structure are to be computed as 16-bit rollover registers. If results overflow 16 bits, they are not saturated, but the overflow bit is ignored and a low 16 bits word is taken as a result. The *T_x* variables can be used as outputs and inputs from a 16-bit past compare timer used as a system clock base.

Special Issues: The *bldczcComputInit* function should be used for initializing the function *bldczcZComput* after *BldcHndlrInit* is called.

Code Example: See Code Example 1: bldczcHndlrInit.

6.3.3.6 bldczcComput - BLDC ZC Computation

Call(s):

```
Result bldczcComput (bldczc_sStateComput *pState_Comput,
                     bldczc_sTimes *pTimes);
```

Arguments:

Table 6-13. *bldczcComput* arguments

pState_Comput	inout	Pointer to structure with computation state and command variables
pTimes	inout	Pointer to structure with all *bldczc* time variables

Description: The *bldczcComput* function computes the commutation periods according to the command variables *Cmd_Comput* and updates the period and time variables in the **p_ZC_Bldc* data structure. Call *bldczcComput* after *bldczcHndlr*, when the flag *Comput_Rq* (Computation Required) is set.

The commutation is computed according to **Figure 6-1**; states' actions are explained below.

- **Service of Commutation - General**
  - After BLDC motor commutation, when *pState_ZCros->Cmd_Comput.B.CmtDone_Comput_RqFlag* = 1,

For More Information On This Product,
Go to: www.freescale.com

Freescale Semiconductor, Inc.

– The action of *bldczcComput*:

– preset commutation period Per_CmtPreset (time) is predicted:

```
Per_CmtPreset[n] = Coef_CmtPrecomp*Per_ZCrosFlt[n-1]
       usually coefficient Coef_CmtPrecomp = 2
If Coef_CmtPrecomp*Per_ZCrosFlt>Max_PerCmt
       then result is limited at Max_PerCmt
```

– Then the time of the next commutation:

```
Commutation Time [n] = T_Cmt0[n] + Per_CmtPreset[n] =
                = T_Cmt0[n] +
                Coef_CmtPrecomp*Per_ZCrosFlt[n-1]
```

will be set by *bldczcHndlr* if no Zero Crossing received.

- **Service of received Back-EMF Zero Crossing**

  – After Back-EMF zero crossing received, when *pState_ZCros->Cmd_Comput.B.ZCOKGet_Comput_RqFlag* = 1

  – Half commutation period `Per_HlfCmt(T2*[n]` is computed from the captured Back-EMF zero crossing time (`T_ZCros[n]`), and variables updated:

```
Per_ZCros[n] = T_ZCros[n] -T_ZCros[n-1] =
       = T_ZCros[n] - T_ZCros0
Per_ZCrosFlt[n] = (1/2*Per_ZCros[n]+1/2*Per_ZCros0)
Per_HlfCmt[n] = 1/2*Per_ZCrosFlt[n]- Advance_angle =
= 1/2*Per_ZCrosFlt[n]- C_CMT_ADVANCE*Per_ZCrosFlt[n]=
Coef_HlfCmt*Per_ZCrosFlt[n]
usually coefficient C_CMT_ADVANCE = 1/4
Per_Toff[n+1] = Per_ZCrosFlt*Coef_Toff and
                     Max_PerCmtProc minimum
Per_ZCros0 <-- Per_ZCros[n]
T_ZCros0 <-- T_ZCros[n]
```

  – Then the next commutation time:

```
Commutation Time [n] = T_ZCros[n] + Per_HlfCmt[n]
```

will be set by *bldczcHndlr*.

- **Service of Commutation after non-Zero Crossing - Corrective Calculation 1**

  – If no Back-EMF Zero Crossing was captured during preset commutation period, *Per_CmtPreset*, when: *pState_ZCros->Cmd_Comput.B.CmtDone_Comput_RqFlag* = 1 and *pState_ZCros->Cmd_Comput.B.ZC_ComputFlag = 1*:

For More Information On This Product,
Go to: www.freescale.com
Freescale Semiconductor, Inc.

– The action of *bldczcComput* is:

T_ZCros[n] <-- T_Cmt0[n+1]

– Then *bldczcComput* performs the same calculations as **Service of received Back-EMF Zero Crossing** and

– **Service of Commutation - General with the** preset commutation period *Per_CmtPreset* prediction will proceed as usual

- -**Service of Back-EMF Zero Crossing (soon) Is Missed - Corrective Calculation 2**

  – If Back-EMF zero crossing was captured before the end of *Per_Toff*, when *pState_ZCros->Cmd_Comput.B.ZCOKGet_Comput_RqFlag* = 1:

  – The action of *bldczcComput* is:
  T_ZCros[n] <-- T_Cmt0[n]+Per_Toff[n]

  – Then *bldczcComput* performs the same calculations as **Service of received Back-EMF Zero Crossing** and the next commutation time:

  Commutation Time [n] = T_ZCros[n] + Per_HlfCmt[n]

  will be set by *bldczcHndlr*.

Returns: The function *bldczcComput* returns:

"FAIL (-1)" => if unexpected status of **pState_Comput* structure

"PASS (0)" => otherwise

Range Issues: All the time variables and components *T_x* in *pTimes* structure are to be computed as 16-bit rollover registers. If results overflow 16 bits, they are not saturated, but the overflow bit is ignored and a low 16 bits word is taken as a result. The *T_x* variables can be used as outputs and inputs from a 16-bit past compare timer used as a system clock base.

For More Information On This Product,
Go to: www.freescale.com

Freescale Semiconductor, Inc.

Special Issues: The *BldcComput* function is intended to be called after the *bldczcHndlr* function if the *Cmd_General.B.Comput_AlgoRqFlag* is set; but the function could also be used alone after initialization by function *BldcComputInit.*

Code Example: See Code Example 1: bldczcHndlrInit.

6.3.3.7 bldczcCmtInit - Initialize BLDC ZC Commutation Service

Call(s):

```
Result bldczcCmtInit ( bldczc_sStateCmt *pState_Cmt,
                       UWord16 Start_Step_Cmt,
                       bldczc_eDirection Direction );
```

Arguments:

Table 6-14. *bldczcCmtInit* arguments

pState_Cmt	out	Pointer to structure with commutation state and command variables
Start_Step_Cmt	in	Start commutation step
Direction	in	Required motor running direction enum BLDCZC_ABC, BLDCZC_ACB

Description: The *bldczcCmtInit* function initializes data structure for the *bldczcCmtServ* function. It should be called when initialization for BLDC motor commutation begins and when starting the motor. It sets the commutation step variable *pState_Cmt->Step_Cmt = pState_Cmt->Step_Cmt = Start_Step_Cmt* and *Cmd_Cmt* command bytes.

Returns: The function *bldczcCmtInit* returns:

"FAIL (-1)" => if unexpected status of **pState_Comput* structure

"PASS (0)" => otherwise

Range Issues: None

Special Issues: The *bldczcComputInit* function should be used for initialization of the function *bldczcZComput* after *BldcHndlrInit* is called.

For More Information On This Product,
Go to: www.freescale.com
Freescale Semiconductor, Inc.

Code Example: See Code Example 1: bldczcHndlrInit.

6.3.3.8 bldczcCmtServ - BLDC ZC Commutation Service

Call(s):

```
Result bldczcCmtServ ( bldczc_sStateCmt *pState_Cmt );
```

Arguments:

Table 6-15. *bldczcCmtServ* arguments

pState_Cmt	inout	Pointer to structure with commutation state and command variables

Description: The *bldczcCmtServ* function should be called from the main software before the motor is commuted, with a device-specific driver called from interrupt. It changes the *Cmd_Cmt* command and the next commutation step variable *Step_Cmt_Next,* according tothe *pState_Cmt->Cmd_Cmt.B.DIRFlag*:

commutation direction sequention of PWM phases acb:

when:

pState_Cmt->Cmd_Cmt.B.DIRFlag = 0:

if:

pState_Cmt->Step_Cmt_Next>=MAX_STEP_CMT

then:

set MIN_STEP_CMT,

else:

pState_Cmt->Step_Cmt_Next = pState_Cmt->Step_Cmt_Next + 1

commutation direction sequention of PWM phases abc:

when

pState_Cmt->Cmd_Cmt.B.DIRFlag = 1:

if

pState_Cmt->Step_Cmt_Next =< MIN_STEP_CMT

For More Information On This Product,
Go to: www.freescale.com

Freescale Semiconductor, Inc.

then:

set MAX_STEP_CMT,

else:

pState_Cmt->Step_Cmt_Next = pState_Cmt->Step_Cmt_Next - 1

Returns: The function *bldczcCmtServ* returns:

"FAIL (-1)" => if unexpected status of **pState_Comput* structure

"PASS (0)" => otherwise

Range Issues: None

Special Issues: The function *bldczcCmtServ* should be called after *bldczcHndlr*, when the flag *CmtServ_AlgoRq* in the *Cmd_General* variable is set by *bldczcHndlr*. The *bldczcHndlr* sets this request after motor commutation is done.

The *bldczcCmtServ* function should be used after initialization by the function *bldczcmtInit.*

Code Example: See Code Example 2: bldczcHndlr

6.3.3.9 bldczcZCrosInit - Initialize BLDC ZC Zero Crossing

Call(s):

```
Result bldczcZCrosInit ( bldczc_sStateZCros *pState_ZCros,
                         bldczc_sStateCmt *pState_Cmt,
                         Word16 Min_ZCrosOKStart_Ini,
                         Word16 Max_ZCrosErr_Ini );
```

Arguments:

Table 6-16. *bldczcZCInit* arguments

pState_ZCros	out	Pointer to structure with Zero Crossing state and command variables
pState_Cmt	in	Pointer to structure with commutation state and command variables
Min_ZCrosOKStart_Ini	in	Minimal commutation with OK Zero Crossing to set *EndStart_ZCrosServ_CmdFlag*

For More Information On This Product,
Go to: www.freescale.com

Freescale Semiconductor, Inc.

Table 6-16. *bldczcZCInit* arguments

Max_ZCrosErr_Ini	in	Maximum number of commutations with Zero Crossing error Initial value to set *MaxZCrosErr_ZCrosServ_CmdFlag*

Description: The *bldczcZCrosInit* function is used to initialize commutation for *bldczcZCrosServ* (alternatively, *bldczcZCrosEdgeServ*) and *bldczcZCrosIntAlg* (alternatively, *bldczcZCrosEdgeIntAlg).* It should be called when initializing BLDC, before motor commutation is started. It sets current and next Zero Crossing masks, expected Zero Crossing Input, and *Cmd_ZCros* command variables for BEMF Zero Crossing sensing.

```
pState_ZCros->Mask_ZCInp =
                    = Mask_ZCInpTab [pState_Cmt->Step_Cmt ]

pState_ZCros->Index_ZC_Phase =
                    = ZC_Phase_Tab [ pStateCmt->Step_Cmt ];

pState_ZCros->Expect_ZCInp =

                = Expect_ZCInp_Tab [ pState_Cmt->Step_Cmt ]

                    [pState_Cmt->Cmd_Cmt.B.DIRFlag ] ;

pState_ZCros->Cmd_ZCros.B.Expect_ZCInp_PositivFlag = \

      Expect_ZCInpFlag_Tab [ pStateCmt->Step_Cmt ]
                    [pStateCmt->Cmd_Cmt.B.DIRFlag ];

pState_ZCros->Mask_ZCInpNext = pState_ZCros->Mask_ZCInp;

pState_ZCros->Index_ZC_PhaseNext =
                    pState_ZCros->Index_ZC_Phase;

pState_ZCros->Expect_ZCInpNext = pState_ZCros->Expect_ZCInp;

pState_ZCros->Cmd_ZCros.B.Expect_ZCInp_PositivNextFlag =

        = pState_ZCros-> Cmd_ZCros.B. Expect_ZCInp_PositivFlag;
```

Returns: The function *bldczcCmtInit* returns:

"FAIL (-1)" => if unexpected status of **pState_ZCros* structure

For More Information On This Product,
Go to: www.freescale.com

Freescale Semiconductor, Inc.

"PASS (0)" => otherwise

Range Issues: None

Special Issues: The *bldczcZCrosInit* function is intended to be called after the *bldczcHndlrInit* function, but it can also be used alone for initialization of functions *bldczcmtServ* and *bldczcmtIntAlg.*

Code Example: See Code Example 1: bldczcHndlrInit.

6.3.3.10 bldczcZCrosIntAlg - BLDC ZC Zero Crossing Interrupt Algorithm

Call(s):

```
Result bldczcZCrosIntAlg (bldczc_sStateZCros *pState_ZCros,
                          UWord16 *T_ZCros,
                          UWord16 T_ZCSample,
                          UWord16 Sample_ZCInput);
```

Arguments:

Table 6-17. *bldczcZCrosIntAlg* arguments

pState_ZCros	inout	Pointer to structure with Zero Crossing state and command variables
T_ZCros	out	Pointer to Zero Crossing time variable
T_ZCSample	in	Time of Zero Crossing sampling
Sample_ZCInput	in	Zero Crossing input sample (low 3 bits masked by *Mask_ZCInp,* bit2 - phase A, bit1 - phase B, bit0 - phase C)

Description: The *bldczcZCrosIntAlg* interrupt algorithm serves BEMF Zero Crossing sensing.

This function has similar functionality to *bldczcZCrosEdgeIntAlg.* The application's requirements will determine which of these functions is used:

For More Information On This Product,
Go to: www.freescale.com
Freescale Semiconductor, Inc.

- bldczcZCrosIntAlg should be used for applications when the Zero Crossing level is sensed continuously (more Interrupts checking the Zero Crossing level) and the edge is evaluated by bldczcZCrosIntAlg.
- bldczcZCrosEdgeIntAlgEdge should be used for applications when the Zero Crossing level is called only when the Zero Crossing edge appears (Zero Crossing Edge Interrupt)

The algorithm *bldczcZCrosIntAlg* should be called from an interrupt. It checks BEMF input to capture BEMF Zero Crossing edge. The *bldczcZCrosIntAlg* cooperates with the *bldczcZCrosServ,* which should be called from the main software after *bldczcHndlr*. The *bldczcZCrosIntAlg* checks the BEMF signal very quickly according to its inputs: sample (*ZC_SamplFlag*) and sample time (*T_ZCSampl*), which are the results of input sampling. The *bldczcZCrosIntAlg* sets Zero Crossing time (*T_ZCros*). The remaining services for BEMF Zero Crossing are left to *bldczcZCrosServ.*

Although not required, it is possible for the application software to call the *bldczcZCrosIntAlg* algorithm from the PWM reload interrupt of the central-aligned PWM. The Zero Crossing detection is then synchronized with the middle of the PWM pulse, where the Zero Crossing signal is most stable.

The functionality is according to Zero Crossing Timing:

BEMF Zero Crossing Received:

When:

pState_ZCros->Cmd_ZCros.B.ZC_ToffFlag=0 (after Toff time period after last commutation) and
pState_ZCros->Cmd_ZCros.B.ZC_GetFlag = 0 (Zero Crossing not get yet) and

pState_ZCros->Expect_ZCInp = Sample_ZCInput (expected and sampled inputs are same)

Then:

**T_ZCros = T_ZCSample* (Zero Crossing time is set)

pState_ZCros->Cmd_ZCros.B.ZCOKGet_CmdFlag = 1; (Zero Crossing OK get command)

For More Information On This Product,
Go to: www.freescale.com

Freescale Semiconductor, Inc.

pState_ZCros->Cmd_ZCros.B.ZC_GetFlag = 1 (Zero Crossing get flag is set)

pState_ZCros->Cntr_ZCrosOK++ (OK succesive Zero Crossing counter incremented)

pState_ZCros->Cntr_ZCrosErr = pState_ZCros->Max_ZCrosErr (Zero Crossing Error Down

counter set to max)

BEMF Zero Crossing (soon) Missed:

When:

The Zero Crossing was assumed, it appeared before *pState_ZCros->Cmd_ZCros.B.ZC_ToffFlag*=0 (before Toff time period after last commutation)

Then:

pState_ZCros->Cmd_ZCros.B.ZCMiss_CmdFlag = 1; (ZeroCrossing missed command)

pState_ZCros->Cntr_ZCrosErr (Zero Crossing Down Counter decremented)

pState_ZCros->Cntr_ZCrosOK = 0 (OK succesive Zero Crossing counter cleared)

Returns: The function *bldczcCmtInit* returns:

"FAIL (-1)" => if unexpected status of **pState_ZCros* structure

"PASS (0)" => otherwise

Range Issues: All the time variables and components *T_x* in *pTimes* structure are to be computed as 16-bit rollover registers. If results overflow 16 bits, they are not saturated, but the overflow bit is ignored and a low 16 bits word is taken as a result. The *T_x* variables can be used as outputs and inputs from a 16-bit past compare timer used as a system clock base.

Special Issues: The *bldczcZCrosIntAlg* function is intended to cooperate with the *bldczcZCrosServ* function.

The *bldczcZCrosIntAlg* should be called as an interrupt algorithm from PWM interrupt for central-aligned PWM with highest priority. Calling *bldczcZCrosServ* from the main software is lower priority and how

For More Information On This Product,
Go to: www.freescale.com

Freescale Semiconductor, Inc.

bldczcZCrosServ is called depends on the system. It may be called from the main software loop as part of the sequence of tasks, or it may be called by an arbiter with multitasking. The *bldczcZCrosIntAlg* sets the *ZCros_Tst* flag.

When *spState_ZCros->Cmd_ZCros.B.ZCrosInt_EnblFlag* is set, *bldczcZCrosIntAlg* should be called in the interrupt. This will ensure Zero Crossing sensing at the appropriate time.

The function *bldczcZCrosIntAlg* is initialized by the function *bldczcZCrosInit.*

Code Example 5: *bldczcZCrosIntAlg*

```
#include "dspfunc.h"
#include "bldc.h"
       /* include BLDC motor with Zero Crossing sensing algorithms */
.....

static void pwm_Reload_A_Callback(void);

.....

static bldczc_sStates             BldcAlgoStates;
static bldczc_sTimes              BldcAlgoTimes;

.....
/*****************************************************************/
/*** Quadrature Timer parameters setting as an Output Compare ****/
/*** with CallbackTimerOC_Cmt called at Compare ******************/
/*****************************************************************/

static const qt_sState quadParamCmt = {

    /* Mode = */                    qtCount,
    /* InputSource = */             qtPrescalerDiv64,   /* 1.825us */
    /* InputPolarity = */           qtNormal,
    /* SecondaryInputSource = */    0,

    /* CountFrequency = */          qtRepeatedly,
    /* CountLength = */             qtPastCompare,
    /* CountDirection = */          qtUp,

    /* OutputMode = */              qtAssertWhileActive,
    /* OutputPolarity = */          qtNormal,
```


For More Information On This Product,
Go to: www.freescale.com

Freescale Semiconductor, Inc.

```
    /* OutputDisabled = */          0,

    /* Master = */                  0,
    /* OutputOnMaster = */          0,
    /* CoChannelInitialize = */     0,
    /* AssertWhenForced = */        0,

    /* CaptureMode = */             qtDisabled,

    /* CompareValue1 = */           PER_START_TIMEROC_CMT, /* ! */
    /* CompareValue2 = */           0,
    /* InitialLoadValue = */        0,

    /* CallbackOnCompare = */       { CallbackTimerOC_Cmt, 0 },
    /* CallbackOnOverflow = */      { 0, 0 },
    /* CallbackOnInputEdge = */     { 0, 0 }
};

.....

/****************************/
/*** Timerinitialization ****/
/****************************/

/* Open Commutation timer */
TimerOC_CmtFD = open(BSP_DEVICE_NAME_QUAD_TIMER_A_2, 0, &quadParamCmt );

.....

/* Enable commutation timer */
ioctl (TimerOC_CmtFD, QT_ENABLE, (void*)&quadParamCmt );

.....

/***************************/
/*** pwm initialization ****/
/***************************/

pwm_sCallback   pwm_CB;

PwmFD = open(BSP_DEVICE_NAME_PWM_A, 0);
pwmIoctl ( PwmFD, PWM_SET_DISABLE_MAPPING_REG1,PWM_ZERO_MASK, BSP_DEVICE_NAME_PWM_A);
pwmIoctl ( PwmFD, PWM_SET_DISABLE_MAPPING_REG2,PWM_ZERO_MASK, BSP_DEVICE_NAME_PWM_A);
pwmIoctl ( PwmFD, PWM_SET_LOAD_MODE, PWM_LOAD_FROM_0_TO_5, BSP_DEVICE_NAME_PWM_A);
/* set pwm_Reload_A_Callback to be call in the middle of center aligned pwm */
pwm_CB.pCallback    = pwm_Reload_A_Callback;

pwm_CB.pCallbackArg = NULL;

pwmIoctl(PwmFD, PWM_SET_RELOAD_CALLBACK, &pwm_CB, BSP_DEVICE_NAME_PWM_A);
```


For More Information On This Product,
Go to: www.freescale.com

Freescale Semiconductor, Inc.

```
.....

.....

/*****************************************/
/*** inside of the main loop           ****/
/*****************************************/

T_Actual = ioctl(TimerOC_CmtFD, QT_READ_COUNTER_REG, 0 );
bldczcHndlr ( pStates, pTimes, T_Actual );
.
.

 if ( pStates->State_General.Cmd_General.B.ZCrosServ_AlgoRqFlag )
     {
      bldczcZCrosServ( &pStates->State_ZCros, &pStates->State_Cmt);
      pStates->State_General.Cmd_General.B.ZCrosServ_AlgoRqFlag = 0;
     }
.....

.....

/****************************************/
/*** pwm interrupt callback function ****/
/****************************************/
static void pwm_Reload_A_Callback(void)
{
UWord16 T_ZCSample;
UWord16 Sample_ZCInput;
if (BldcAlgoStates.State_ZCros.Cmd_ZCros.B.ZCrosInt_EnblFlag == 1)
    {
     /* get Zero Crossing Sample Time */
     T_ZCSample = ioctl(TimerOC_CmtFD, QT_READ_COUNTER_REG, 0 );
     Sample_ZCInput = decIoctl (DecFD, DEC_GET_FILTERED_ENCSIGNALS,\
                                NULL, BSP_DEVICE_NAME_DECODER_0);
     Sample_ZCInput = BldcAlgoStates.State_ZCros.Mask_ZCInp & Sample_ZCInput;
       /* Mask Zero Cros Input with required ZC input sample mask */
     bldczcZCrosIntAlg (&BldcAlgoStates.State_ZCros, &BldcAlgoTimes.T_ZCros,\
                        T_ZCSample, Sample_ZCInput);
    }
/* clear interrupt flag */
pwmIoctl (PwmFD, PWM_CLEAR_RELOAD_FLAG, NULL, BSP_DEVICE_NAME_PWM_A);
}
.....
```

6.3.3.11 bldczcZCrosEdgeIntAlg - BLDC ZC Zero Crossing Edge Interrupt Algorithm

Call(s):

```
Result bldczcZCrosEdgeIntAlg (bldczc_sStateZCros *pState_ZCros,
```


For More Information On This Product,
Go to: www.freescale.com

Freescale Semiconductor, Inc.

```
                                        UWord16 *T_ZCros,
                                        UWord16 T_ZCSample,
                                        Frac16 U_ZCPhaseX);
```

Arguments:

Table 6-18. *bldczcZCrosEdgeIntAlg* arguments

pState_ZCros	inout	Pointer to structure with Zero Crossing state and command variables
T_ZCros	out	Pointer to Zero Crossing time variable
T_ZCSample	in	Time of Zero Crossing sampling
U_ZCPhaseX	in	Voltage of Zero Crossing phase sample (phase indexed by Index_ZC_Phase)

Description: The *bldczcZCrosEdgeIntAlg* Interrupt Algorithm serves BEMF Zero Crossing sensing.

This function has similar functionality to *bldczcZCrosIntAlg.* The application's requirements will determine which of these functions is used:

- bldczcZCrosEdgeIntAlgEdge should be used for applications when the Zero Crossing level is called only when the Zero Crossing edge appears (Zero Crossing Edge Interrupt)
- bldczcZCrosIntAlg should be used for applications when the Zero Crossing level is sensed continuously (more Interrupts checking the Zero Crossing level) and the edge is evaluated by bldczcZCrosIntAlg.

The *bldczcZCrosEdgeIntAlg* function should be called from an interrupt. It checks BEMF input in order to determine BEMFZero Crossing edge. The function *bldczcZCrosEdgeIntAlg* cooperates with the *bldczcZCrosEdgeServ,* which should be called from the main software after *bldczcHndlr*. The *bldczcZCrosEdgeIntAlg* checks the BEMF signal very quickly according to its inputs: sample (*ZC_SamplFlag*) and sample time (*T_ZCSampl*), which are the results of input sampling. The *bldczcZCrosEdgeIntAlg* sets Zero Crossing time (*T_ZCros*). The

For More Information On This Product,
Go to: www.freescale.com

Freescale Semiconductor, Inc.

remaining services for BEMF Zero Crossing are left to *bldczcZCrosEdgeServ.*

Although not necessary, it is possible for the application software to call the *bldczcZCrosEdgeIntAlg* algorithm from the ADC Zero Crossing interrupt. It is also useful if the application starts the A/D conversion in synchronization with the middle of the central-aligned PWM, where the signal for the Zero Crossing edge is most stable. It is also possible to call *bldczcZCrosEdgeIntAlg* from the Input Capture Interrupt of BEMF comparator.

The functionality is according to Zero Crossing Timing:

BEMF Zero Crossing Received:

When:

pState_ZCros->Cmd_ZCros.B.ZC_ToffFlag=0 (after Toff time period after last commutation)

and

pState_ZCros->Cmd_ZCros.B.ZC_GetFlag = 0 (Zero Crossing not get yet)

and

(((pState_ZCros->Cmd_ZCros.B.Expect_ZCInp_PositivFlag) and (0 <= U_ZCPhaseX))

or

((pState_ZCros->Cmd_ZCros.B.Expect_ZCInp_PositivFlag) and (0 <= U_ZCPhaseX)))

Then:

**T_ZCros = T_ZCSample* (Zero Crossing time is set)

pState_ZCros->Cmd_ZCros.B.ZCOKGet_CmdFlag = 1; (Zero Crossing OK get command)

pState_ZCros->Cmd_ZCros.B.ZC_GetFlag = 1 (Zero Cros get flag is set)

pState_ZCros->Cntr_ZCrosOK++ (OK successive Zero Crossing counter incremented)

For More Information On This Product,
Go to: www.freescale.com

Freescale Semiconductor, Inc.

pState_ZCros->Cntr_ZCrosErr = pState_ZCros->Max_ZCrosErr
(Zero Crossing Down!

counter set to max)

pState_ZCros->Cmd_ZCros.B.ZCrosInt_EnblFlag = 0;

Returns: The function *bldczcCmtInit* returns:

"FAIL (-1)" => if unexpected status of **pState_ZCros* structure

"PASS (0)" => otherwise

Range Issues: All the time variables and components *T_x* in *pTimes* structure are to be computed as 16-bit rollover registers. If results overflow 16 bits, they are not saturated, but the overflow bit is ignored and a low 16 bits word is taken as a result. The *T_x* variables can be used as outputs and inputs from a 16-bit past compare timer used as a system clock base.

Special Issues: The *bldczcZCrosEdgeIntAlg* function is intended to cooperate with *bldczcZCrosEdgeServ* function.

The function bldczcZCrosEdgeIntAlg should be called as an interrupt algorithm from PWM interrupt for central-aligned PWM with highest priority. Calling bldczcZCrosEdgeServ is from the main software is lower priority and how bldczcZCrosEdgeServ is called depends on the system. It may be called from the main software loop as part of the sequence of tasks or it may be called by an arbiter with multitasking. The function bldczcZCrosEdgeIntAlg sets the flag ZCOKGet_CmdFlag.

When the spState_ZCros->Cmd_ZCros.B.ZCrosInt_EnblFlag is set, bldczcZCrosIntAlg should be called in the interrupt. This will ensure Zero Crossing sensing at the appropriate time.

The *bldczcZCrosIntAlg* function is initialized by the function *bldczcZCrosInit.*

Code Example 6: *bldczcZCrosEdgeIntAlg*

```
in configuration file appconfig.h:

.....
```


For More Information On This Product,
Go to: www.freescale.com

Freescale Semiconductor, Inc.

```
/* ADC samples */
#define INCLUDE_ADCA_SAMPLE_0
#define INCLUDE_ADCA_SAMPLE_1
#define INCLUDE_ADCA_SAMPLE_2
             /* Defined ADC for 3 phases of BEMF voltages */

#define ADC_RAW_ZERO_CROSSING_CALLBACK         ADC_Zero_Crossing_CallBack_ISR
             /* Defined ADC Zero Crossing callback function */
.....


in application.c file:

#include "dspfunc.h"
#include "bldc.h"
       /* include BLDC motor with Zero Crossing sensing algorithms */
.....

void ADC_Zero_Crossing_CallBack_ISR (adc_eCallbackType type, adc_tSampleMask
                                     causedSampleMask);
.....

static bldczc_sStates             BldcAlgoStates;
static bldczc_sTimes              BldcAlgoTimes;
static Frac16                     U_Dc_Bus_Half;

static bldczc_fU_ZC3Phase         U_ZC3Phase;

.....

/*****************************************************************/
/*** Quadrature Timer parameters setting as an Output Compare ****/
/*** with CallbackTimerOC_Cmt called at Compare ******************/
/*****************************************************************/

static const qt_sState quadParamCmt = {

    /* Mode = */                     qtCount,
    /* InputSource = */              qtPrescalerDiv64,   /* 1.825us */
    /* InputPolarity = */            qtNormal,
    /* SecondaryInputSource = */     0,

    /* CountFrequency = */           qtRepeatedly,
    /* CountLength = */              qtPastCompare,
    /* CountDirection = */           qtUp,

    /* OutputMode = */               qtAssertWhileActive,
    /* OutputPolarity = */           qtNormal,
    /* OutputDisabled = */           0,

    /* Master = */                   0,
```


For More Information On This Product,
Go to: www.freescale.com

Freescale Semiconductor, Inc.

```
    /* OutputOnMaster = */          0,
    /* CoChannelInitialize = */     0,
    /* AssertWhenForced = */        0,

    /* CaptureMode = */             qtDisabled,

    /* CompareValue1 = */           PER_START_TIMEROC_CMT, /* ! */
    /* CompareValue2 = */           0,
    /* InitialLoadValue = */        0,

    /* CallbackOnCompare = */       { CallbackTimerOC_Cmt, 0 },
    /* CallbackOnOverflow = */      { 0, 0 },
    /* CallbackOnInputEdge = */     { 0, 0 }
};

.....

/****************************/
/*** Timer initialization ****/
/****************************/

/* Open Commutation timer */
TimerOC_CmtFD = open(BSP_DEVICE_NAME_QUAD_TIMER_A_2, 0, &quadParamCmt );

.....

/* Enable commutation timer */
ioctl (TimerOC_CmtFD, QT_ENABLE, (void*)&quadParamCmt );

.....

.....

/*****************************************************************/
/*** ADC parameters setting with zero crossing and Zero Offset ****/
/*****************************************************************/

static const adc_sState sadc2 = {
              /* phase A ADC channel */
    /* AnalogChannel = */    ADC_CHANNEL_2,   /* Phase A voltage */
    /* SampleMask = */                0x04,   /* sample 2 */
    /* OffsetRegister = */    U_DCBUS_HALF,   /* one half of DC bus voltage for
                                                 Zero Crossing! */
    /* LowLimitRegister = */             0,   /* Low limit checking not activated */
    /* HighLimitRegister = */       0xffff,   /* High limit checking not activated */
    /* ZeroCrossing = */        ADC_ZC_ANY,   /* any Zero Crossing edge interrupt */
};
.....

static const adc_sState sadc1 = {..... /* same as EVM_sadc2 */
              /* phase B ADC channel */
```


For More Information On This Product,
Go to: www.freescale.com

Freescale Semiconductor, Inc.

```
.....

static const adc_sState sadc0 = {..... /* same as EVM_sadc2 */
              /* phase C ADC channel */

.....




/***************************/
/*** ADCinitialization ****/
/***************************/

    sadc2.OffsetRegister = U_Dc_Bus_Half;
    sadc1.OffsetRegister = U_Dc_Bus_Half;
    sadc0.OffsetRegister = U_Dc_Bus_Half;

    AdcFD2  = open(BSP_DEVICE_NAME_ADC_0, 0, &sadc2 );
    AdcFD1  = open(BSP_DEVICE_NAME_ADC_0, 0, &sadc1 );
    AdcFD0  = open(BSP_DEVICE_NAME_ADC_0, 0, &sadc0 );
.....


.....

/*****************************************/
/*** inside of the main loop           ****/
/*****************************************/

T_Actual = ioctl(TimerOC_CmtFD, QT_READ_COUNTER_REG, 0 );
bldczcHndlr ( pStates, pTimes, T_Actual );
.
.

 if ( pStates->State_General.Cmd_General.B.ZCrosServ_AlgoRqFlag )
     {
     U_ZCPhaseX = U_ZC3Phase [BldcAlgoStates.State_ZCros.Index_ZC_Phase];
    bldczcZCrosEdgeServ( &pStates->State_ZCros, &pStates->State_Cmt, U_ZCPhaseX );
     pStates->State_General.Cmd_General.B.ZCrosServ_AlgoRqFlag = 0;
    }
.....


.....

/*****************************************/
/*** after motor commutation proceeded ****/
/*****************************************/
if (BldcAlgoStates.State_ZCros.Cmd_ZCros.B.ZCInpSet_DrvRqFlag)
    {
```


For More Information On This Product,
Go to: www.freescale.com

Freescale Semiconductor, Inc.

```
/*****************************************************/
/*** setting of required phase Zero Crossing Edge ****/
/*****************************************************/
     ArchIO.AdcA.ZeroCrossControlReg=SetADC_ZCInp_Tab[ pStates->State_Cmt.Step_Cmt ]

     BldcAlgoStates.State_ZCros.Cmd_ZCros.B.ZCInpSet_DrvRqFlag = 0;
    };
.....


.....

/**************************/
/*** pwm in the middle ****/
/**************************/
ioctl( AdcFD0, ADC_START, 0 );

....


/*******************************************************************/
/***   Zero Crossing Recognition                                 ****/
/*******************************************************************/
void ADC_Zero_Crossing_CallBack_ISR (adc_eCallbackType type, adc_tSampleMask
causedSampleMask)
{
/* if Zero Crossing caused by phase voltages */
if (causedSampleMask & 0x0007)
   {
    ioctl (AdcFD0, ADC_STATE_READ, &(U_ZC3Phase[0]));
    ioctl (AdcFD1, ADC_STATE_READ, &(U_ZC3Phase[1]));
    ioctl (AdcFD2, ADC_STATE_READ, &(U_ZC3Phase[2]));
    /* Possibly U_ZC3Phase[0] = ArchIO.AdcA.ResultReg[0];
    U_ZC3Phase[1] = ArchIO.AdcA.ResultReg[1];
    U_ZC3Phase[2] = ArchIO.AdcA.ResultReg[2]; */
    if (Cmd_Application.B.ZeroCros_EnblFlag)
       {
        if (BldcAlgoStates.State_ZCros.Cmd_ZCros.B.ZCrosInt_EnblFlag)
           {
           U_ZCPhaseX = U_ZC3Phase [BldcAlgoStates.State_ZCros.Index_ZC_Phase];
          bldczcZCrosEdgeIntAlg(&BldcAlgoStates.State_ZCros,&BldcAlgoTimes.T_ZCros,\
                                 T_ZCSample, U_ZCPhaseX);
           }
       }
   }
}
.....
```


For More Information On This Product,
Go to: www.freescale.com

Freescale Semiconductor, Inc.

6.3.3.12 bldczcZCrosServ - BLDC ZC Zero Crossing Service

Call(s):

```
Result bldczcZCrosServ ( bldczc_sStateZCros *pState_ZCros,
                         bldczc_sStateCmt   *pState_Cmt );
```

Arguments:

Table 6-19. *bldczcZCrosServ* arguments

pState_ZCros	inout	Pointer to structure with Zero Crossing state and command variables
pState_Cmt	out	Pointer to structure with commutation state and command variables

Description: The *bldczcZCrosServ* serves BEMF Zero Crossing sensing.

This function has similar functionality to *bldczcZCrosEdgeServ.* The application requirements will determine which of these functions is used:

- bldczcZCrosServ should be used with bldczcZCrosIntAlg for applications when Zero Crossing level is sensed continuously (more Interrupts checking the Zero Crossing level) and the edge is evaluated by bldczcZCrosIntAlg.
- bldczcZCrosEdgeServe should be used with bldczcZCrosEdgeIntAlg for applications when bldczcZCrosEdgeIntAlg is called only when Zero Crossing edge appears (Zero Crossing Edge Interrupt)

The function *bldczcZCrosServ* sets the Next (BEMF) Zero Crossing masks, the Next expected Zero Crossing Input for Zero Crossing sensing in the data structure pointed by *pState_ZCros,* and performs the final decisions for BEMF Zero Crossing according to inputs from *bldczcZCrosIntAlg.* The *bldczcZCrosServ* function should be called after *bldczcHndlr* when the *ZCrosServ_AlgoRqFlag* is set. The functionality is dependent upon the commutation status.

After Commutation:

When:

For More Information On This Product,
Go to: www.freescale.com

Freescale Semiconductor, Inc.

pState_ZCros->Cmd_ZCros.B.CmtDone_ZCrosServ_RqFlag = 1:

If:

pState_ZCros->Cntr_ZCrosOK >= *pState_ZCros->Min_ZCrosOKStart*

Then:

pState_ZCros->Cmd_ZCros.B.EndStart_ZCrosServ_CmdFlag = 1 (starting phase should be

finished - command for *bldczcHndlr* indicating that the starting phase is complete)

If: *pState_ZCros->Cntr_ZCrosErr* = 0

Then: *pState_ZCros->Cmd_ZCros.B.MaxZCrosErr_ZCrosServ_CmdFlag = 1 (*is set)

After Commutation Proceeding finished (after flyback current decay):

When: *pState_ZCros->Cmd_ZCros.B.CmtProcEnd_ZCrosServ_RqFlag* = 1

Then: *bldczcZCrosServ* sets *pState_ZCros->Cmd_ZCros.B.ZCrosInt_EnblFlag* = 1 (zero crossing sensing enabled =>then *bldczcZeroCrosIntAlg* should be called in its dedicated interrupt)

After Commutation and bldczcCmtServ:

When:

pState_ZCros->Cmd_ZCros.B.CmtServ_ZCrosServ_RqFlag = 1 (request was set by *bldczcHndlr):*

Then:

pState_ZCros->Mask_ZCInpNext = *pState_ZCros->Mask_ZCInp*

p*State_ZCros->Expect_ZCInpNext* = *pState_ZCros->Expect_ZCInp;*

For More Information On This Product,
Go to: www.freescale.com

Freescale Semiconductor, Inc.

Returns: The function *bldczcCmtInit* returns:

"FAIL (-1)" => if unexpected status of **pState_ZCros* structure

"PASS (0)" => otherwise

Range Issues: None

Special Issues: The *bldczcZCrosIntAlg* function is intended to cooperate with *bldczcZCrosServ* function.

The bldczcZCrosIntAlg should be called as an interrupt algorithm from PWM interrupt for central-aligned PWM with highest priority. Calling bldczcZCrosServ from the main software is lower priority and how bldczcZCrosServ is called depends on the system. It may be called from the main software loop as part of the sequence of tasks or it may be called by an arbiter with multitasking. The function bldczcZCrosIntAlg sets the ZCOKGet_CmdFlag and ZCMiss_CmdFlag flags.

The function *bldczcZCrosIntAlg* is initialized by the function *bldczcZCrosInit.*

Code Example: See Code Example 2: bldczcHndlr and Code Example 5: bldczcZCrosIntAlg.

6.3.3.13 bldczcZCrosEdgeServ - BLDC ZC Zero Crossing Edge Service

Call(s):

```
Result bldczcZCrosEdgeServ ( bldczc_sStateZCros *pState_ZCros,
                             bldczc_sStateCmt *pState_Cmt,
                             Frac16 U_ZCPhaseX);
```

Arguments:

Table 6-20. *bldczcZCrosEdgeServ* arguments

pState_ZCros	inout	Pointer to structure with Zero Crossing state and command variables
pState_Cmt	out	Pointer to structure with Commutation state and command variables
U_ZCPhaseX	in	Voltage of Zero Crossing phase sample (phase indexed by Index_ZC_Phase)

For More Information On This Product,
Go to: www.freescale.com

Freescale Semiconductor, Inc.

Description: The function *bldczcZCrosEdgeServ* serves BEMF Zero Crossing sensing.

This function has similar functionality to *bldczcZCrosServ.* The application's requirement will determine which of these functions is used:

- bldczcZCrosEdgeServe should be used with bldczcZCrosEdgeIntAlg for applications when bldczcZCrosEdgeIntAlg is called only when Zero Crossing edge appears (Zero Crossing Edge Interrupt)
- bldczcZCrosServ should be used with bldczcZCrosIntAlg for applications when Zero Crossing level is sensed continuously (more Interrupts checking the Zero Crossing level) and the edge is evaluated by bldczcZCrosIntAlg.

The *bldczcZCrosEdgeServe* function sets the Next (BEMF) Zero Crossing masks, Next expected Zero Crossing Input for Zero Crossing sensing in the data structure pointed by *pState_ZCros,* and performs the final decisions for BEMF Zero Crossing according to inputs from *bldczcZCrosIntAlg. The bldczcZCrosEdgeServ* function should be called after *bldczcHndlr* when the *ZCrosServ_AlgoRqFlag* is set. The functionality is dependent upon the commutation status.

After Commutation :

When:

pState_ZCros->Cmd_ZCros.B.CmtDone_ZCrosServ_RqFlag = 1:

If:

pState_ZCros->Cntr_ZCrosOK >=
pState_ZCros->Min_ZCrosOKStart

Then:

pState_ZCros->Cmd_ZCros.B.EndStart_ZCrosServ_CmdFlag = 1 is set as a command for
bldczcHndlr (starting should be finished after Min_ZCrosOKStart good commutations)

If:

pState_ZCros->Cntr_ZCrosErr = 0

For More Information On This Product,
Go to: www.freescale.com

Freescale Semiconductor, Inc.

Then:
pState_ZCros->Cmd_ZCros.B.MaxZCrosErr_ZCrosServ_CmdFlag = 1 is set

After Commutation Proceeding finished (after flyback current decay):

When:
pState_ZCros->Cmd_ZCros.B.CmtProcEnd_ZCrosServ_RqFlag = 1

Then: *bldczcZCrosEdgeServ* sets pState_ZCros->Cmd_ZCros.B.ZCrosInt_EnblFlag=1 => Zero Crossing sensing enable (then *bldczcZeroCrosIntAlg* should be called in its interrupt)

After Toff time when BEMF Zero Crossing (soon) missed:

When:

(the Zero Crossing was assumed it appeared before Toff time period after last commutation)

ZCToffEnd_ZCrosServ_RqFlag (End of Toff time period after last commutation) and

(((*pState_ZCros->Cmd_ZCros.B.Expect_ZCInp_PositivFlag*) and (*0 <= U_ZCPhaseX*)) or

((*pState_ZCros->Cmd_ZCros.B.Expect_ZCInp_PositivFlag*) and (*0 <= U_ZCPhaseX*)))

Then:

pState_ZCros->Cmd_ZCros.B.ZC_GetFlag = 1;

pState_ZCros->Cmd_ZCros.B.ZCMiss_CmdFlag = 1; (is set as a command for bldczcHndlr -where it is processed for commutation calculation)

pState_ZCros->Cmd_ZCros.B.ZCMissErr_CmdFlag = 1;

pState_ZCros->Cntr_ZCrosOK = 0;

pState_ZCros->Cntr_ZCrosErr--;

pState_ZCros->Cmd_ZCros.B.ZCrosInt_EnblFlag = 0; (father Zero Crossing checking disabled until a new commutation step)

For More Information On This Product,
Go to: www.freescale.com

Freescale Semiconductor, Inc.

After Commutation and bldczcCmtServ:

When:

pState_ZCros->Cmd_ZCros.B.CmtServ_ZCrosServ_RqFlag = 1 (was set by *bldczcHndlr*):

Then:

pState_ZCros->Index_ZC_PhaseNext = ZC_Phase_Tab [pStateCmt->Step_Cmt_Next];

pState_ZCros->Cmd_ZCros.B.Expect_ZCInp_PositivNextFlag = \
Expect_ZCInpFlag_Tab [pStateCmt->Step_Cmt_Next]
[pStateCmt->Cmd_Cmt.B.DIRFlag];

Returns: The function *bldczcCmtInit* returns:

"FAIL (-1)" => if unexpected status of **pState_ZCros* structure

"PASS (0)" => otherwise

Range Issues: None

Special Issues: The *bldczcZCrosEdgeIntAlg* function is intended to cooperate with *bldczcZCrosEdgeServ* function.

The function bldczcZCrosEdgeIntAlg should be called as an interrupt algorithm from PWM interrupt for central-aligned PWM with highest priority. Calling bldczcZCrosEdgeServfrom the main software is lower priority and how bldczcZCrosEdgeServ is called depends on the system. It may be called from the main software loop as part of the sequence of tasks or it may be called by an arbiter with multitasking. The function bldczcZCrosEdgeIntAlg sets flags ZCOKGet_CmdFlag and ZCMiss_CmdFlag.

The *bldczcZCrosIntAlg* function is initialized by the function *bldczcZCrosInit.*

Code Example: See Code Example 6: bldczcZCrosEdgeIntAlg.

Freescale Semiconductor, Inc.

For More Information On This Product,
Go to: www.freescale.com

Section 7. Customization Guide

7.1 Contents

7.2 Application Suitability Guide 157

7.3 Setting of SW Parameters for Customer Motor 159

7.2 Application Suitability Guide

This application suitability guide deals with issues which may be encountered when tailoring application using customer motor.

7.2.1 Minimal Application Speed

As it is known, the back-EMF voltage is proportionally dependent on motor speed. Since the sensorless back-EMF zero crossing sensing technique is based on back-EMF voltage, it has some minimal speed limitations! The motor start-up is solved by starting (back-EMF acquisition) state, but minimal operation speed is limited.

The minimal speed depends on many factors of the motor and hardware design, and differs for any application. This is because the back-EMF zero crossing is disturbed and effected by the zero crossing comparator threshold as explained below and in the sections **7.2.3.2 Effect of Mutual Inductance** and **7.2.3.1 Effect of Mutual Phase Capacitance** .

NOTE: *Usually, the minimal speed for reliable operation is from 7% to 20% of the motor's nominal speed.*

For More Information On This Product,
Go to: www.freescale.com

Freescale Semiconductor, Inc.

7.2.2 Voltage Closed Loop

As shown in **Section 8. Application Setup**, the speed control is based on voltage closed loop control. This should be sufficient for most applications.

7.2.3 Motor Suitability

Back-EMF zero crossing sensing is achievable for most of BLDC motors with a trapezoidal back-EMF. However, for some BLDC motors the back-EMF zero crossing sensing can be problematic since it is affected by unbalanced mutual phase capacitance and inductance. It can disqualify some motors from using sensorless techniques based on the back-EMF sensing.

7.2.3.1 Effect of Mutual Phase Capacitance

The effect of the mutual phase capacitances can play an important role in the back-EMF sensing. Usually the mutual capacitance is very small. Its influence is only significant during the PWM switching when the system experiences very high *du/dt*.The effect of mutual capacitance is described in section **3.2.5.2 Effect of Mutual Phase Capacitance**.

NOTE: *Note that the configuration of the end-turns of the phase windings has a significant impact. Therefore, it must be properly managed to preserve the balance of the mutual capacity. This is especially important for prototype motors that are usually hand-wound.*

CAUTION: *Failing to maintain balance of the mutual capacitance can easily disqualify such motors from using sensorless techniques based on the back-EMF sensing. Usually the BLDC motors with windings wound on separate poles show minor presence of the mutual capacitance. Thus, the disturbance is insignificant.*

7.2.3.2 Effect of Mutual Inductance

The negative effect on back-EMF sensing of mutual inductance, is not to such a degree as unbalanced mutual capacitance. However, it can be noticed on the sensed phase. The difference of the mutual inductances

For More Information On This Product,
Go to: www.freescale.com
Freescale Semiconductor, Inc.

between the coils which carry the phase current and the coil used for back-EMF sensing, causes the PWM pulses to be superimposed onto the detected back-EMF voltage.

The effect of mutual inductance is described in section **3.2.5.1 Effect of Mutual Inductance**.

NOTE: *The BLDC motor with stator windings distributed in the slots has technically higher mutual inductances than other types. Therefore, this effect is more significant. On the other hand, the BLDC motor with windings wound on separate poles, shows minor presence of the effect of mutual inductance.*

CAUTION: *However noticeable this effect, it does not degrade the back-EMF zero crossing detection, because it is cancelled at the zero crossing point. Additional simple filtering helps to reduce ripples further.*

7.3 Setting of SW Parameters for Customer Motor

The SW was tuned for three hardware and motor kits (EVM, LV, HV) as described in **Section 8. Application Setup** and **2.2 System Specification**. It can, of course, be used for other motors, but the software parameters need to be set accordingly.

The parameters are located in the file (External RAM version):

...bldc_adc_zerocross_sa\bldcadczcdefines.h

and *config* files:

...bldc_adc_zero_cross_sa\ApplicationConfig\appconfig.h.

The motor control drive usually needs setting/tuning of:

- dynamic parameters
- current/voltage parameters

The SW selects valid parameters (one of the 3 parameter sets) based in the identified hardware. **Table 7-1** shows the starting string of the SW constants used for each hardware.

For More Information On This Product,
Go to: www.freescale.com
Freescale Semiconductor, Inc.

Table 7-1. SW Parameters Marking

Hardware Set	Software Parameters Marking
Low-Voltage Evaluation Motor Hardware Set Configuration	EVM_yyy
Low-Voltage Hardware Set Configuration	LV_yyy
High-Voltage Hardware Set Configuration	HV_yyy

In the following text the EVM, LV, HV will be replaced by x. The sections is sorted in order recommended to follow, when one is tuning/changing parameters.

NOTE: *Most important constants for reliable motor start-up are described in* ***7.3.2.2 Start-up Periods*** *and in* ***7.3.1.2 Alignment Current and Current Regulator Setting****.*

7.3.1 Current and Voltage Settings

7.3.1.1 Dc-bus Voltage, Maximal and Minimal Voltage and Current Limits Setting

For the right regulator settings, it is required to set the expected dc-bus voltage in *bldcadczcdefines.h:*

```
#define x_VOLT_DC_BUS         12.0 /* DC-Bus expected voltage */
```

The current voltage limits for SW protection are:

```
#define x_DCB_UNDERVOLTAGE 3.0      /* Under-voltage limit [V] */
#define x_DCB_OVERVOLTAGE 15.8      /Over-voltage limit [V] */
#define x_DCB_OVERCURRENT 48.0      /* Over-current limit [A] */
```

NOTE: *Note the hardware protection with setting of pots R116, R71 for DSP56805EVM (see EVM manuals for details)*

7.3.1.2 Alignment Current and Current Regulator Setting

All this section's settings are in *bldcadczcdefines.h.*

The current during Alignment stage (before motor starts) is recommended to be set to nominal motor current value.

For More Information On This Product,
Go to: www.freescale.com
Freescale Semiconductor, Inc.

#define x_CURR_ALIGN_DESIRED_A 17.0 /* Alignment Current Desired [A] */

Usually it is necessary to set the PI regulator constants. (The PI regulator is described in algorithm **controllerPItype1** source code)

The current controller works with constant execution (sampling) period determined by PWM frequency:

Current Controller period = 1/pwm frequency.

Both proportional and integral gain have two coefficients: gain portion and scale

Current Proportional gain:

```
#define x_CURR_PI_PROPORTIONAL_GAIN 30000      /* proportional
gain portion */
#define x_CURR_PI_PROPORTIONAL_GAIN_SCALE 24   /* proportional
gain scale*/
```

Current Integral gain:

```
#define x_CURR_PI_INTEGRAL_GAIN  19000        /* integral gain
portion */
#define x_CURR_PI_INTEGRAL_GAIN_SCALE 23      /* integral gain
gain scale */
```

The PI controller proportional and integral constants can be set experimentally.

NOTE: *If the overcurrent fault is experienced during Alignment stage, then it is recommended to slow down the regulator. If the yy_GAIN_SCALE is increased, the gain is decreased.*

NOTE: The coefficients x_CURR_PI_PROPORTIONAL_GAIN_REAL (resp. x_CURR_PI_INTEGRAL_TI_REAL) are not directly used for regulator setting, but can be used to calculate the `x_CURR_PI_PROPORTIONAL_GAIN`, `x_CURR_PI_PROPORTIONAL_GAIN_SCALE` (resp. `x_CURR_PI_INTEGRAL_GAIN`, `x_CURR_PI_INTEGRAL_GAIN_SCALE`) using the formulae in the comments

For More Information On This Product,
Go to: www.freescale.com

Freescale Semiconductor, Inc.

7.3.2 Commutation Control Settings

In order to get the motor reliably started the commutation control constants must be properly set.

7.3.2.1 Alignment Period

The time duration of alignment stage must be long enough to stabilize the rotor before it starts.

This is set in seconds in *bldcadczcdefines.h.*

```
#define x_PER_ALIGNMENT_S           0.5    /* Alignment period
[s] */
```

NOTE: *For first tuning it is recommended to set this period high enough (e.g. 5s). Then, if the motor works well it can be significantly lowered (e.g. 0.1s).*

7.3.2.2 Start-up Periods

The constants defining the start up need to be changed according to drive dynamic.

All this section settings are in *bldcadczcdefines.h:*

```
#define x_PER_CMTSTART_US        7200.0      /* Start
Commutation Period [micros] */
#define x_PER_TOFFSTART_US      14400.0      /* Start Zero
Crossing
                                                 Toff Period
[micros] */
```

The unit of these constants is 1 µs.

`x_PER_CMTSTART_US` is the commutation period used to compute the first (start) commutation period.

`x_PER_TOFFSTART_US` is the first (start) Toff interval after commutation where BEMF Zero Crossing is not sensed.

NOTE: *It is recommended to set* `x_PER_TOFFSTART_US = 2*x_PER_CMTSTART_US`.

Then the first motor commutation period = `x_PER_CMTSTART_US * 2`

For More Information On This Product,
Go to: www.freescale.com
Freescale Semiconductor, Inc.

The Back-EMF Zero Crossing is not sensed during whole first period, because it is very small and hence the Zero Crossing information is not reliable during this period.

NOTE: *Setting of this constant is an empirical process. It is difficult to use a precise formula, because there are many factors involved which are difficult to obtain in the case of a real drive (motor and load mechanical inertia, motor electromechanical constants, and sometimes also the motor load). So they need to be set with a specific motor.*

Table 7-2 helps with setting of this constant

Table 7-2. Start-up Periods

Motor size	x_PER_CMTSTART_US	x_PER_TOFFSTART_US	First commutation period
	[µs]	[µs]	[s]
Slow motor/ high load motor mechanical inertia	>5000	>10000	>10ms
Fast motor / high load motor mechanical inertia	<5000	<10000	<10ms

NOTE: *Slowing down the speed regulator (see **7.3.3.1 Maximal and Minimal Speed and Speed Regulator Setting**) helps if a problem with start up is encountered using the above stated setting .*

7.3.2.3 Minimal Zero Commutation of Starting (Back-EMF Acquisition) Stage

```
#define x_MIN_ZCROSOK_START    0x02 /* minimal Zero Crossing
                                        OK commutation to finish
                                        Bldc starting phase */
```

This constant **x_MIN_ZCROSOK_START** determines the minimal number of the Zero Crossing OK commutation to finish the BLDC starting phase.

NOTE: *It is recommended to use the value 0x02 or 0x03 only. If this constant is set too high, the motor control will not enter the Running stage fast enough.*

For More Information On This Product,
Go to: www.freescale.com
Freescale Semiconductor, Inc.

7.3.2.4 Wrong Zero Crossing

```
#define x_MAX_ZCROSERR 0x04 /*Maximal Zero Crossing Errors (to
stop commutations) */
```

The constant **x_MAX_ZCROSERR** is used for control of commuting problems. The application software stops and starts the motor again, whenever **x_MAX_ZCROSERR** successive commutations with problematical Zero Crossing appears.

NOTE: *During tuning of the software for other motors, this constant can be temporarily increased.*

7.3.2.5 Commutation Proceeding Period

Commutation preceeding period is the constant time after motor commutation, when BEMF Zero Crossing is not measured (until the phase current decays to zero).

```
#define x_CONST_PERPROCCMT_US 170.0  /* Period of Commutation
proceeding [micros]*/
```

The unit of this constant is 1 µs.

NOTE: *This constant needs to be lower than 1/3 of (minimal) commutation period at motor maximal speed.*

7.3.2.6 Commutation Timing Setting

NOTE: *Normally this structure should not necessarily be changed. If the constants described in this section need to be changed a detailed study of the control principle needs to be studied in* ***Section 3. BLDC Motor Control*** *and* ***Section 6. Software Algorithms****.*

If it is required to change the motor commutation advancing (retardation) the coefficients in starting and running structures need to be changed:

```
x_StartComputInit
x_RunComputInit
```

Both structures are in *bldcadczcdefines.h*.

For More Information On This Product,
Go to: www.freescale.com
Freescale Semiconductor, Inc.

The **x_StartComputInit** structure is used by the application software during Starting stage (see **3.3.4.5 Starting (Back-EMF Acquisition)**).

The **x_RunComputInit** structure is used by the application software during Running stage (see **3.3.4.2 Running**).

`Coef_CmtPrecompLShft`
`Coef_CmtPrecompFrac`

fractional and scaling part of Coef_CmtPrecomp

final Coef_CmtPrecomp = **Coef_CmtPrecompFrac** << **Coef_CmtPrecompLShft**

this final Coef_CmtPrecomp determines the interval between motor commutations when no BEMF Zero Crossing is captured. The application SW multiplies fractional Coef_CmtPrecomp with commutation period.

`Coef_HlfCmt`

determines Commutation advancing (retardation) - the interval between BEMF Zero Crossing and motor commutation

The application SW multiplies fractional **Coef_HlfCmt** with commutation period.

`Coef_Toff`

determines the interval between BEMF Zero Crossing and motor commutation

The application SW multiplies fractional **Coef_Toff** with commutation period

7.3.3 Speed Setting

7.3.3.1 Maximal and Minimal Speed and Speed Regulator Setting

All this section settings are in *bldcadczcdefines.h.*

In order to compute the speed setting, it is important to set the number of BLDC motor commutations per motor mechanical revolution:

```
#define x_MOTOR_COMMUTATION_PREV   18    /* Motor Commutations
Per Revolution */
```


For More Information On This Product,
Go to: www.freescale.com
Freescale Semiconductor, Inc.

Maximal required speed in rpm is set by:

```
#define x_SPEED_ROTOR_MAX_RPM    3000    /* maximal rotor speed
[rpm] */
```

If you also request to change the minimal motor speed, then you need to set minimal angular speed:

```
#define x_OMEGA_MIN_SYSU         4096  /* angular frequency
minimal [system unit] */
```

NOTE: *Remember that minimal angular speed is not in radians, but in system units where 32768 is the maximal speed done by* `x_SPEED_ROTOR_MAX_RPM`

The speed PI regulator constants can be tuned as described below. All settings can be found in *bldcadczcdefines.h.*

The execution period of the speed controller is set by:

```
#define PER_SPEED_SAMPLE_S 0.001   /* Sampling Period of the
Speed Controller [s] */
```

Both proportional and integral gain have two coefficients: portion and scale.

Speed Proportional gain:

```
#define x_SPEED_PI_PROPORTIONAL_GAIN     22000 /* speed
proportional gain portion*/
#define x_SPEED_PI_PROPORTIONAL_GAIN_SCALE  19 /* speed proportional
gain scale*/
```

Speed Integral gain:

```
#define x_SPEED_PI_INTEGRAL_GAIN         27500 /* speed integral
gain portion */
#define x_SPEED_PI_INTEGRAL_GAIN_SCALE      23 /* speed integralgain
gain scale */
```

The PI controller proportional and integral constants can be set experimentally.

NOTE: *If the motor has problems when requested speed is changed, then it is recommended to slow down the regulator. If the yy_GAIN_SCALE is increased, the gain is decreased.*

The coefficients x_SPEED_PI_PROPORTIONAL_GAIN_REAL (resp. x_SPEED_PI_INTEGRAL_TI_REAL) are not directly used for regulator

For More Information On This Product,
Go to: www.freescale.com
Freescale Semiconductor, Inc.

setting, but can be used to calculate `x_SPEED_PI_PROPORTIONAL_GAIN`, `x_SPEED_PI_PROPORTIONAL_GAIN_SCALE` (resp. `x_SPEED_PI_INTEGRAL_GAIN`, `x_SPEED_PI_INTEGRAL_GAIN_SCALE`) using the formulae in the comments.

7.3.4 Conclusion Software Parameters Setting

If all the points in **7.3 Setting of SW Parameters for Customer Motor** are done, the software should be customized to customer motor.

If the software customizing of your motor was not successful, it is recommended that you read **7.2 Application Suitability Guide**, since the software may not be suitable for some applications.

Freescale Semiconductor, Inc.

For More Information On This Product,
Go to: www.freescale.com

Freescale Semiconductor, Inc.

For More Information On This Product,
Go to: www.freescale.com

Section 8. Application Setup

8.1 Contents

8.2 Introduction 169
8.3 Warning 169
8.4 Application Outline 170
8.5 Application Description 171
8.6 Application Set-Up 175
8.7 Projects Files 180
8.8 Application Build & Execute 182

8.2 Introduction

This application exercises simple control of the BLDC Sensorless Motor Control with Back-EMF Zero Crossing Using A/D Converter on the DSP56F805.

8.3 Warning

This application operates in an environment that includes dangerous voltages and rotating machinery.

Be aware that the application power stage and optoisolation board are not electrically isolated from the mains voltage - they are live with risk of electric shock when touched.

An isolation transformer should be used when operating off an ac power line. If an isolation transformer is not used, power stage grounds and oscilloscope grounds are at different potentials, unless the oscilloscope

For More Information On This Product,
Go to: www.freescale.com

Freescale Semiconductor, Inc.

is floating. Note that probe grounds and, therefore, the case of a floated oscilloscope are subjected to dangerous voltages.

The user should be aware that:

- Before moving scope probes, making connections, etc., it is generally advisable to power down the high-voltage supply.
- To avoid inadvertently touching live parts, use plastic covers.
- When high voltage is applied, using only one hand for operating the test setup minimizes the possibility of electrical shock.
- Operation in lab setups that have grounded tables and/or chairs should be avoided.
- Wearing safety glasses, avoiding ties and jewelry, using shields, and operation by personnel trained in high-voltage lab techniques are also advisable.
- Power transistors, the PFC coil, and the motor can reach temperatures hot enough to cause burns.

When powering down; due to storage in the bus capacitors, dangerous voltages are present until the power-on LED is off.

8.4 Application Outline

The system is designed to drive a 3-phase Brushless DC motor. The application has the following specifications:

- BLDC sensorless motor
- 115 or 230V AC or 12V DC Supply
- Targeted for DSP56F805EVM board
- Running on 3-phase BLDC Motor EVM at 12V, 3-Phase AC/BLDC High-Voltage Power Stage, or 3-Phase AC/BLDC Low-Voltage Power Stage
- Speed control loop
- Motor mode in both direction of rotation
- Minimum speed of 250, 400, or 300 rpm

For More Information On This Product,
Go to: www.freescale.com
Freescale Semiconductor, Inc.

- Maximum speed of 2000, 2500, or 3000 rpm
- Manual interface (RUN/STOP switch, UP/DOWN push buttons control, LED indication)
- Over-voltage, under-voltage, over-current and over-heating fault protection
- Hardware autodetection
- PC remote control interface (speed set-up)
- PC master software remote monitor
  - PC master software monitor interface (applied voltage, required voltage, speed, RUN/STOP switch status, application mode)
  - PC master software speed scope (observes actual and desired speed)

8.5 Application Description

This application performs sensorless control of the BLDC motor on the DSP56F805 processor with close loop speed control. In the application, the PWM module is set to independent mode with a 10.0kHz switching frequency. The state of the zero crossing signals are read from the Input Monitor Register of the Quadrature Encoder. The masking of PWM channels is controlled by the PWM Channel Control Register. The content of this register is derived from the Back-EMF zero crossing signals.

This BLDC Motor Control Application can operate in two modes:

1. Manual Operating Mode
   The drive is controlled by the RUN/STOP switch (S6). The motor speed is set by the UP (S2-IRQB) and DOWN (S1-IRQA) push buttons; see **Figure 8-1**. If the application runs and motor spinning is disabled (i.e., the system is ready) the USER LED (LED3, shown in **Figure 8-2**) will blink. When motor spinning is enabled, the USER LED is *On*. Refer to **Table 8-1** for application states.

For More Information On This Product,
Go to: www.freescale.com

Freescale Semiconductor, Inc.

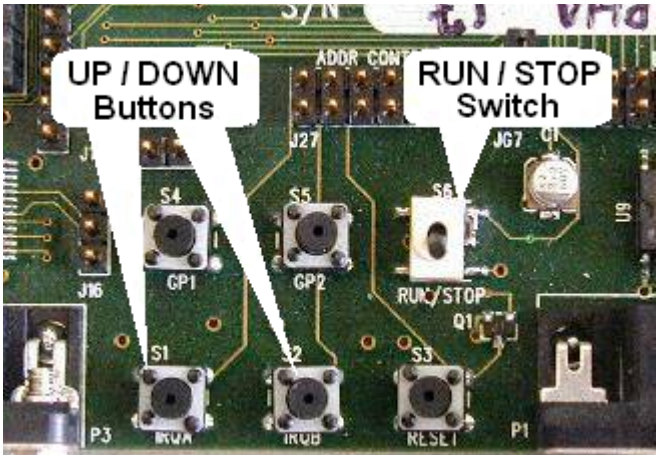

Figure 8-1. RUN/STOP Switch and UP/DOWN Buttons at DSP56F805EVM

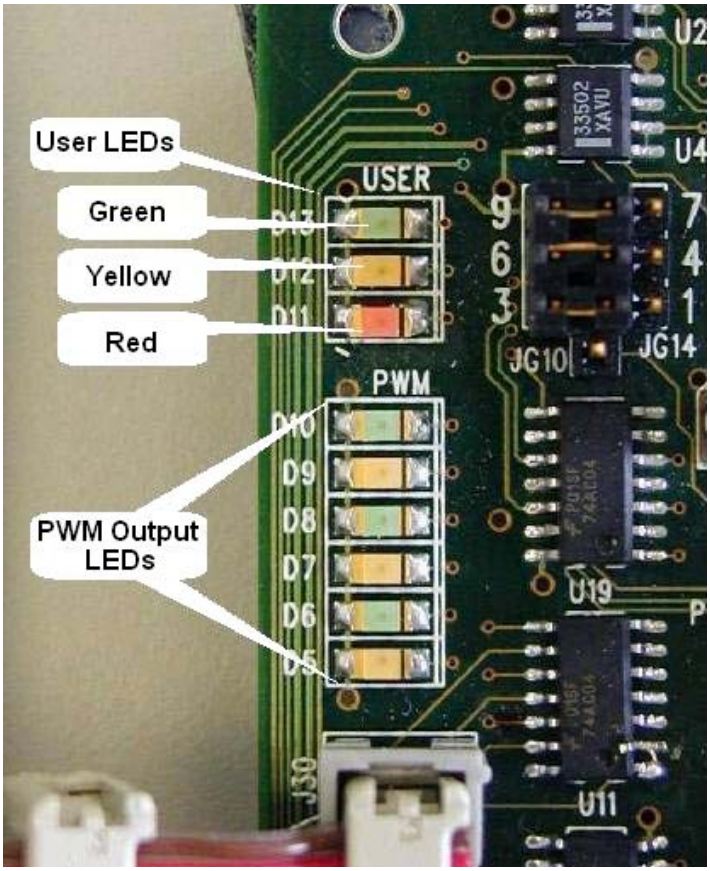

Figure 8-2. USER and PWM LEDs at DSP56F805EVM

Freescale Semiconductor, Inc.

For More Information On This Product,
Go to: www.freescale.com

Table 8-1. Motor Application States

Application State	Motor State	Green LED State
Stopped	Stopped	Blinking at a frequency of 2Hz and the red led state is off
Running	Spinning	On and the red led state is off
Fault	Stopped	Blinking at a frequency of 8Hz and the red led state is on

2. PC master software (Remote) Operating Mode
   The drive is controlled remotely from a PC through the SCI communication channel of the DSP device via an RS-232 physical interface. The drive is enabled by the RUN/STOP switch, which can be used to safely stop the application at any time. PC master software enables to set the required speed of the motor.

The following control actions are supported:

- Start the motor (by setting the required speed on the bar graph)
- Stop the motor (by setting the Zero speed on the bar graph)
- Set the Required Speed of the motor

PC master software displays the following information:

- Required Speed of the motor
- Actual Speed of the motor
- Dc-bus voltage
- Dc-bus current
- Temperature of the power stage
- Fault status (No Fault, Over-voltage, Under-voltage, Over-currents in phases, Over-current in dc-bus, Over-heating)
- Motor status - Running/Stand-by

Start the PC master software window's application, *bldc_zc_adc_sa.pmp*. **Figure 8-3** illustrates the PC master software control window after this project has been launched.

For More Information On This Product,
Go to: www.freescale.com

Freescale Semiconductor, Inc.

NOTE: *If the PC master software project (.pmp file) is unable to control the application, it is possible that the wrong load map (.elf file) has been selected. PC master software uses the load map to determine addresses for global variables being monitored. Once the PC master software project has been launched, this option may be selected in the PC master software window under Project/Select Other Map FileReload.*

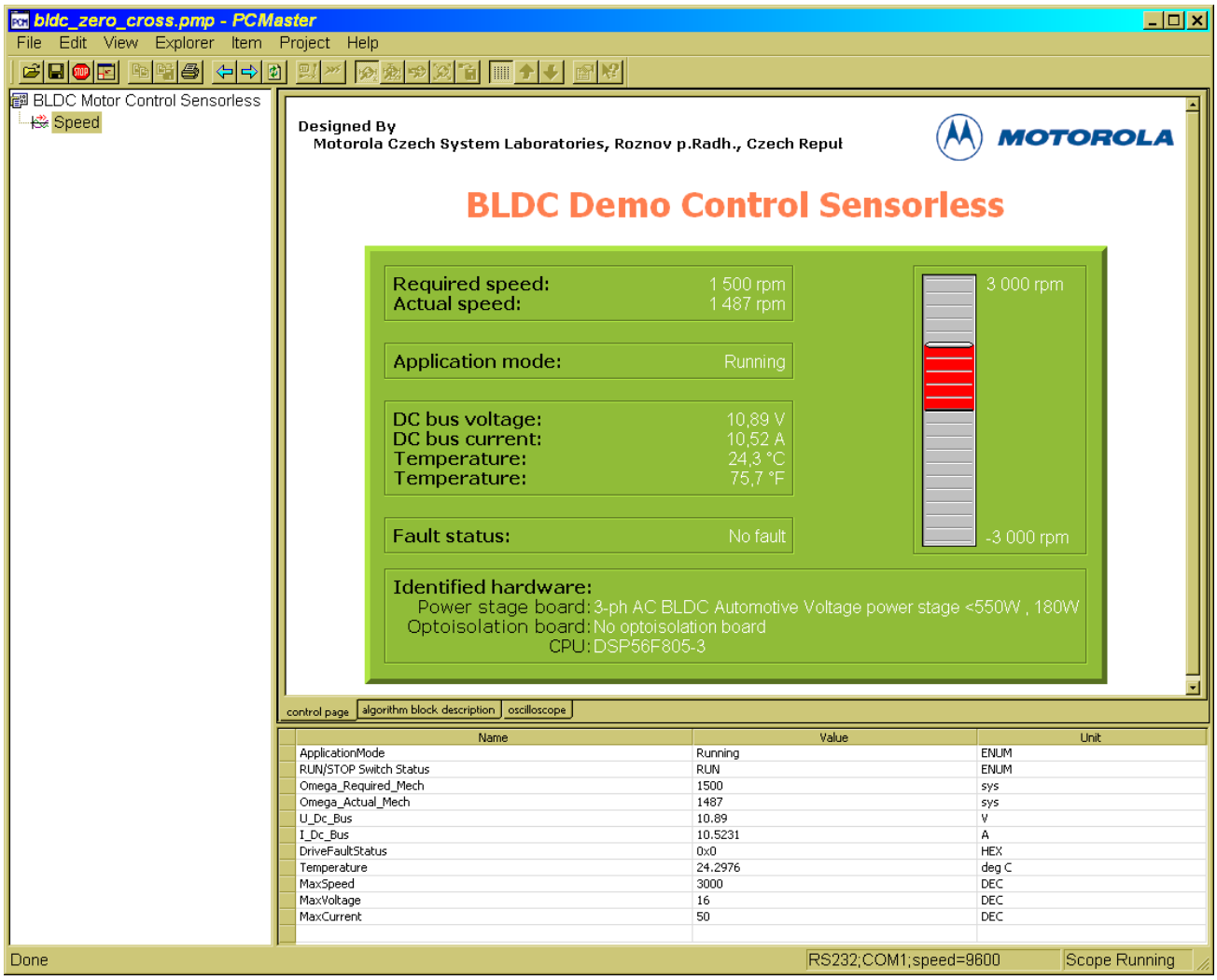

Figure 8-3. PC Master Software Control Window

Freescale Semiconductor, Inc.

For More Information On This Product,
Go to: www.freescale.com

8.6 Application Set-Up

Figure 8-4 illustrates the hardware set-up for the BLDC Sensorless Motor Control Application with Zero Crossing Using A/D Converter.

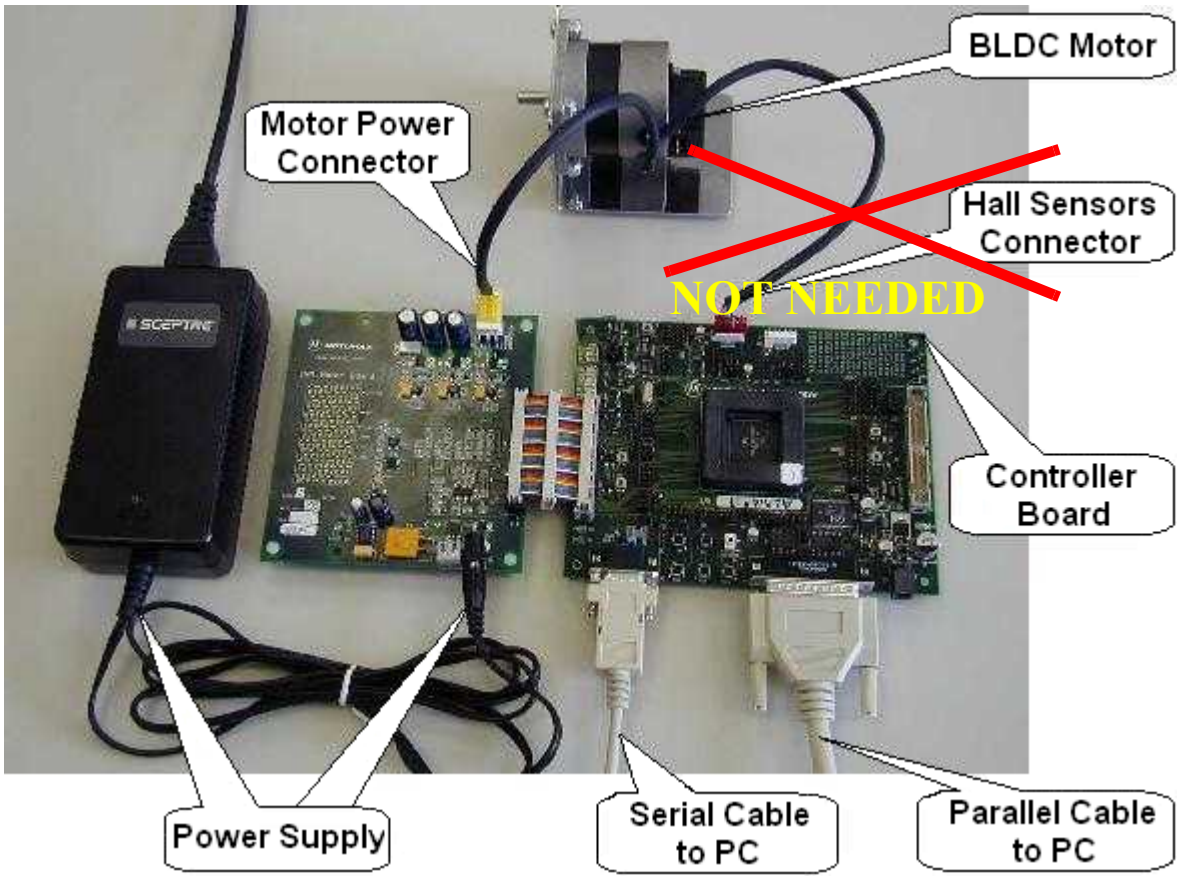

Figure 8-4. Set-up of the BLDC Motor Control Application using DSP56F805EVM

Thanks to automatic board identification, the software can also be run on:

- 3-Phase AC/BLDC Low-Voltage Power Stage; see Figure 8-5
- 3-Phase AC/BLDC High-Voltage Power Stage; see Figure 8-6

For More Information On This Product,
Go to: www.freescale.com

Freescale Semiconductor, Inc.

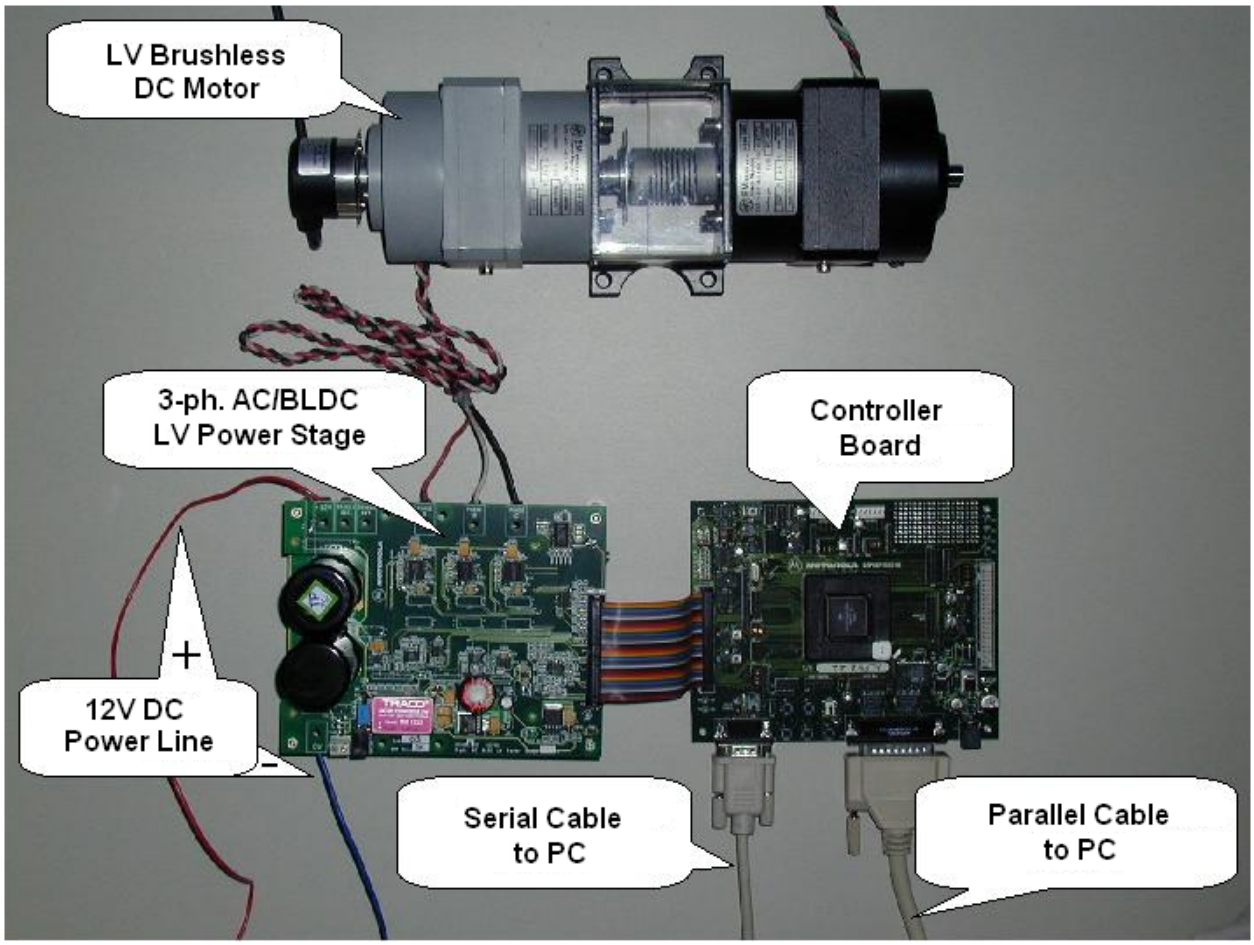

Figure 8-5. Set-up of the Low-Voltage BLDC Motor Control Application

The correct order of phases (phase A, phase B, phase C) for the BLDC motor is:

- phase A = white wire
- phase B = red wire
- phase C = black wire

When facing a motor shaft, if the phase order is: phase A, phase B, phase C, the motor shaft should rotate clockwise (i.e., positive direction, positive speed).

For More Information On This Product,
Go to: www.freescale.com

Freescale Semiconductor, Inc.

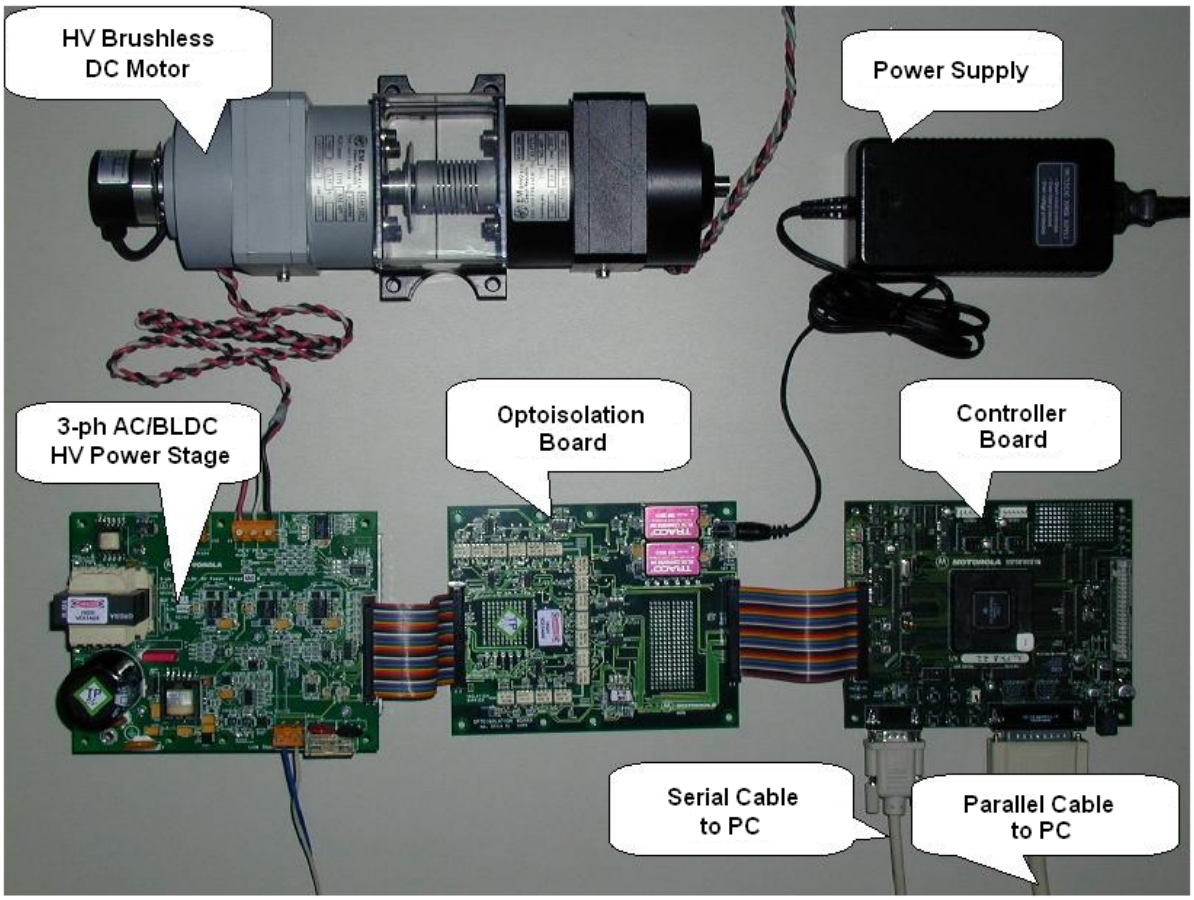

Figure 8-6. Set-up of the High-Voltage BLDC Motor Control Application

The system consists of the following components:

- BLDC Motor IB23810
  - supplied in kit ECMTREVAL - Evaluation Motor Board Kit
- EVM Motor Board:
  - supplied in kit with IB23810 Motor: ECMTREVAL - Evaluation Motor Board Kit
- BLDC Motor Type SM 40N, EM Brno s.r.o., Czech Republic
  - supplied with
- Loding gen. Type SG 40N, EM Brno s.r.o., Czech Republic
  - as: ECMTRLOVBLDC kit

For More Information On This Product,
Go to: www.freescale.com

Freescale Semiconductor, Inc.

- 3-ph. AC BLDC LV Power Stage 200 W
  - supplied as: ECLOVACBLDC kit
- BLDC Motor Type SM 40V, EM Brno s.r.o., Czech Republic
  - supplied with:
- Loding gen. Type SG 40N, EM Brno s.r.o., Czech Republic
  - As: ECMTRHIVBLDC
- 3-ph. AC BLDC HV Power Stage 180 W
  - supplied with:
- Optoisolation Board
  - as: ECOPTHIVACBLDC kit
- DSP56F805 Board:
  - DSP56F805 Evaluation Module
- The serial cable - needed for the PC master software debugging tool only.
- The parallel cable - needed for the Metrowerks Code Warrior debugging and s/w loading.

For detailed information, refer to **Section 4. Hardware Design**.

8.6.1 Application Set-Up Using DSP56F805EVM

To execute the BLCD Sensorless Motor Control, the DSP56F805EVM board requires the strap settings shown in **Figure 8-7** and **Table 8-2**.

Freescale Semiconductor, Inc.

For More Information On This Product,
Go to: www.freescale.com

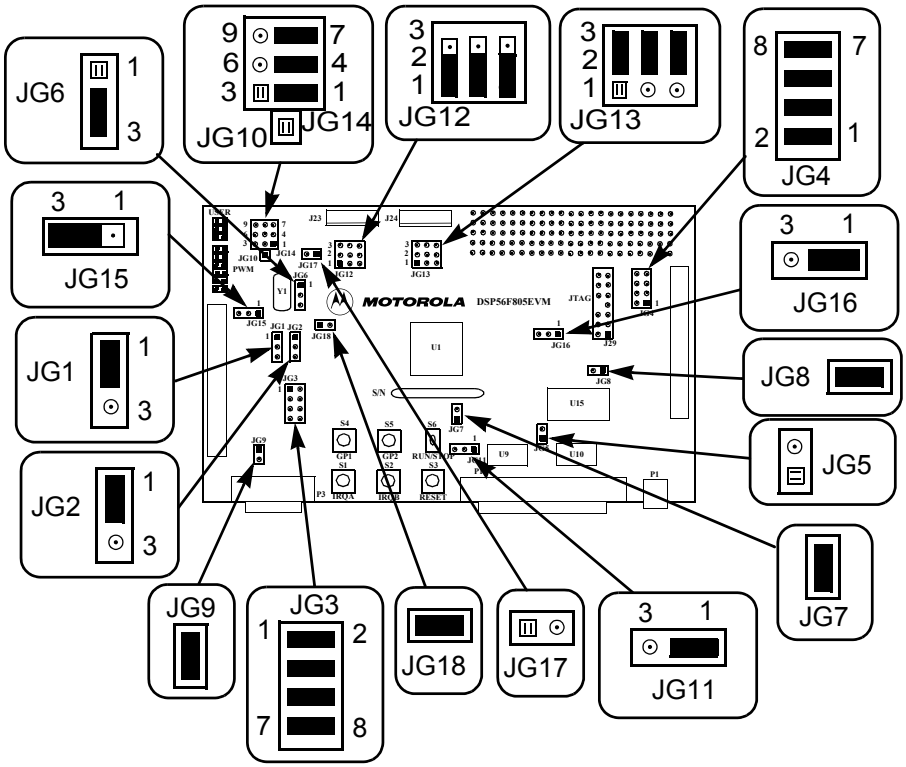

Figure 8-7. DSP56F805EVM Jumper Reference

Table 8-2. DSP56F805EVM Jumper Settings

Jumper Group	Comment	Connections
JG1	PD0 input selected as a high	1-2
JG2	PD1 input selected as a high	1-2
JG3	Primary UNI-3 serial selected	1-2, 3-4, 5-6, 7-8
JG4	Secondary UNI-3 serial selected	1-2, 3-4, 5-6, 7-8
JG5	Enable on-board parallel JTAG Command Converter Interface	NC
JG6	Use on-board crystal for DSP oscillator input	2-3
JG7	Select DSP's Mode 0 operation upon exit from reset	1-2
JG8	Enable on-board SRAM	1-2
JG9	Enable RS-232 output	1-2

For More Information On This Product,
Go to: www.freescale.com

Freescale Semiconductor, Inc.

Table 8-2. DSP56F805EVM Jumper Settings

Jumper Group	Comment	Connections
JG10	Secondary UNI-3 Analog temperature input unused	NC
JG11	Use Host power for Host target interface	1-2
JG12	Primary Encoder input selected Zero Crossing signals	1-2, 4-5, 7-8
JG13	Secondary Encoder input selected	2-3, 5-6, 8-9
JG14	Primary UNI-3 3-Phase Current Sense selected as Analog Inputs	1-2, 4-5, 7-8
JG15	Primary UNI-3 dc-bus Over-current selected FAULTA1	2-3
JG16	Secondary UNI-3 Phase A Over-current selected for FAULTB1	1-2
JG17	CAN termination unselected	NC
JG18	Use on-board crystal for DSP oscillator input	1-2

NOTE: *When running the EVM target system in a stand-alone mode from Flash, the JG5 jumper must be set in the 1-2 configuration to disable the command converter parallel port interface.*

8.7 Projects Files

The BLDC Motor Control application is composed of the following files:

- **...\bldc_zc_adc_sa\bldczcapplication.c,** main program
- **...\bldc_zc_adc_sa\bldc_zc_adc_sa.mcp,** application project file
- **....\bldc_zc_adc_sa\ApplicationConfig\appconfig.h,** application configuration file
- **...\bldc_zc_adc_sa\SystemConfig\ExtRam\linker_ram.cmd,** linker command file for external RAM
- **...\bldc_zc_adc_sa\SystemConfig\Flash\linker_flash.cmd,** linker command file for Flash
- **...\bldc_zc_adc_sa\SystemConfig\Flash\flash.cfg,** configuration file for Flash

For More Information On This Product,
Go to: www.freescale.com
Freescale Semiconductor, Inc.

- **...\bldc_zc_adc_sa\PCMaster\zero_cross.pmp**, PC master software file

These files are located in the application folder.

Motor Control algorithms used in the application:

- **...\controller.c, .h**: source and header files for PI controller
- **...\bldc.h, bldcdrv.c, .h**: source and header files for Brushless DC Motor driver
- **...\bldcZC.c, .h**: source and header files for BLDC Zero Crossing Algorithms

Other functions used in the application:

- **...\boardId.c, .h**: source and header files for the board identification function

The application can run:

- Using DSP56800_Quick_Start environment
- Stand Alone

In case the application is **using libraries of the DSP5680_Quick_Start** tool, the application project file refers to the necessary resources (algorithms and peripheral drivers) of the tool.

In case the application is **running stand-alone**, all the necessary resources (algorithms and peripheral drivers) are part of the application project file. All the resources are copied into the following folder under the application folder so the libraries of the DSP56800_Quick_Start are not required any more:

- **...\bldc_zc_adc_sa\src\include**, folder for general C-header files
- **...\bldc_zc_adc_sa\src\dsp56805**, folder for the device specific source files, e.g. drivers
- **...\bldc_zc_adc_sa\src\pc_master_support**, folder for PC master software source files
- **...\bldc_zc_adc_sa\src\algorithms**, folder for algorithms

For More Information On This Product,
Go to: www.freescale.com

Freescale Semiconductor, Inc.

8.8 Application Build & Execute

When building the BLDC Sensorless Motor Control Application, the user can create an application that runs from internal *Flash* or *External RAM*. To select the type of application to build, open the *bldc_zero_cross.mcp* project and select the target build type, as shown in **Figure 8-8**.
A definition of the projects associated with these target build types may be viewed under the *Targets* tab of the project window.

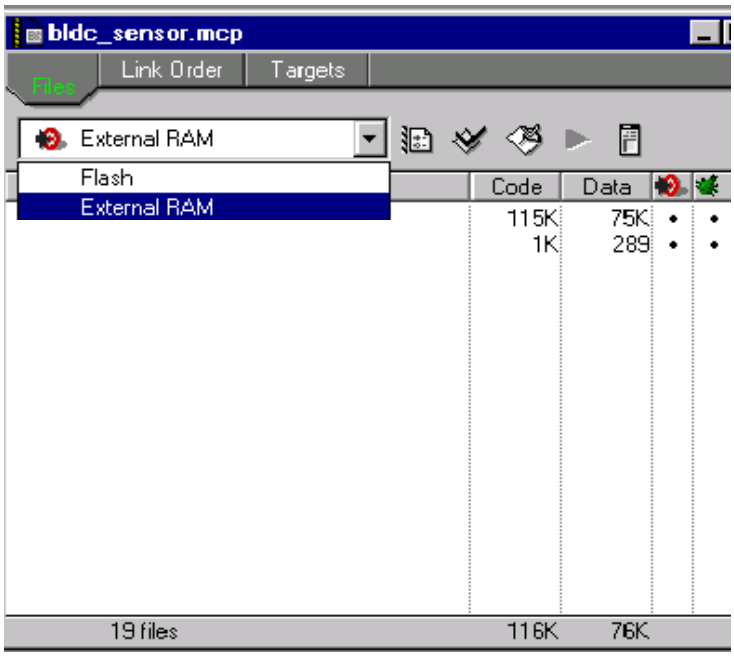

Figure 8-8. Target Build Selection

The project may now be built by executing the *Make* command, as shown in **Figure 8-9**. This will build and link the BLDC Sensorless Motor Control Applicationand all needed Metrowerks and Quick_Start libraries.

Freescale Semiconductor, Inc.

For More Information On This Product,
Go to: www.freescale.com

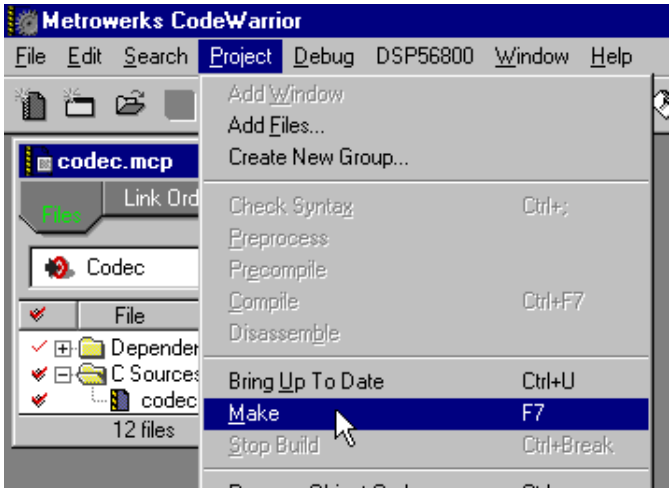

Figure 8-9. Execute *Make* Command

To execute the BLDC Sensorless Motor Control application, select *Project\Debug* in the CodeWarrior IDE, followed by the *Run* command. For more help with these commands, refer to the CodeWarrior tutorial documentation in the following file located in the CodeWarrior installation folder:

<...>\CodeWarrior Documentation\PDF\Targeting_DSP56800.pdf

If the Flash target is selected, CodeWarrior will automatically program the internal Flash of the DSP with the executable generated during *Build*. If the External RAM target is selected, the executable will be loaded to off-chip RAM.

Once Flash has been programmed with the executable, the EVM target system may be run in a stand-alone mode from Flash. To do this, set the JG5 jumper in the 1-2 configuration to disable the parallel port, and press the RESET button.

Once the application is running, move the RUN/STOP switch to the RUN position and set the required speed using the UP/DOWN push buttons. Pressing the UP/DOWN buttons should incrementally increase the motor speed until it reaches maximum speed. If successful, the BLDC motor will be spinning.

For More Information On This Product,
Go to: www.freescale.com

Freescale Semiconductor, Inc.

NOTE: *If the RUN/STOP switch is set to the RUN position when the application starts, toggle the RUN/STOP switch between the STOP and RUN positions to enable motor spinning. This is a protection feature that prevents the motor from starting when the application is executed from CodeWarrior.*

You should also see a lighted green LED, which indicates that the application is running. If the application is stopped, the green LED will blink at a 2Hz frequency. If an Undervoltage fault occurs, the green LED will blink at a frequency of 8Hz.

Freescale Semiconductor, Inc.

For More Information On This Product,
Go to: www.freescale.com

Appendix A. References

1. Motion Control Development Tools found on the World Wide Web at:
   http://e-www.motorola.com
2. *DSP56F805 Evaluation Module Hardware User's Manual*, DSP56F805EVMUM/D, Motorola 2001
3. *Motorola Embedded Motion Control 3-Phase AC BLDC High-Voltage Power Stage User's Manual* (document order number MEMC3PBLDCPSUM/D), Motorola 2000
4. *Motorola Embedded Motion Control Optoisolation Board* (document order number MEMCOBUM/D), Motorola 2000
5. *Motorola Embedded Motion Control Evaluation Motor Board User's Manual* (document order number MEMCEVMBUM/D), Motorola 2000
6. *Motorola Embedded Motion Control 3-Phase BLDC Low-Voltage Power Stage User's Manual* (document order number MEMC3PBLDCLVUM/D), Motorola 2000
7. User's Manual for PC Master Software, Motorola 2000, found on the World Wide Web at:
   http://e-www.motorola.com
8. *Low Cost High Efficiency Sensorless Drive for Brushless DC Motor using MC68HC(7)05MC4* (document order number AN1627), Motorola
9. *DSP Parallel Command Converter Hardware User's Manual*, MCSL, MC108UM2R1
10. *Embedded Software Development Kit for 56800/56800E*, MSW3SDK000AA, on Motorola WWW 1., Motorola, 2001

For More Information On This Product,
Go to: www.freescale.com

Freescale Semiconductor, Inc.

References

Freescale Semiconductor, Inc.

For More Information On This Product,
Go to: www.freescale.com

Appendix B. Glossary

AC — Alternative Current.

ACIM — AC Induction Motor.

A/D converter— analog to digital converter.

ADC — analog to digital converter - see “A/D converter”

back-EMF — back Electro-Motive Force (in this document it means the voltage inducted into motor winding due to rotor movement)

BLDC — Brushless DC motor.

CW — CodeWarrior - compillers produced by Metrowerks

DC — Direct Current.

dc-bus — part of power converter with direct current

DC-motor — Direct Current motor, if not mentioned differently, it means the motor with brushes.

DT — see “Dead Time (DT)”

Dead Time (DT) — short time that must be inserted between the turning off of one transistor in the inverter half bridge and turning on of the complementary transistor due to the limited switching speed of the transistors.

duty cycle — A ratio of the amount of time the signal is on versus the time it is off. Duty cycle is usually represented by a percentage.

ECLOVACBLDC — 3-ph AC/BLDC Low Voltage Power Stage

ECMTRLOVBLDC — 3-ph BLDC Low Voltage Motor-Brake SM40N + SG40N

For More Information On This Product,
Go to: www.freescale.com

Freescale Semiconductor, Inc.

ECMTREVAL — Evaluation Motor Board Kit (supplied in kit with trapezoidal BLDC IB23810)

ECOPTHIVACBLDC — 3-ph AC/BLDC High Voltage Power Stage + Optoisolation Board

ECMTRHIVBLDC — 3-ph BLDC High Voltage Motor-Brake SM40V + SG40N

ECOPTINL — Optoisolation between host computer and MCU board evaluation or customer target cards (optoisolation board)

ECOPT — Optoisolation between power stage and processor evaluation or controller cards (in line optoisolator)

IDE — Integrated Developement Environment

interrupt — A temporary break in the sequential execution of a program to respond to signals from peripheral devices by executing a subroutine.

input/output (I/O) — Input/output interfaces between a computer system and the external world. A CPU reads an input to sense the level of an external signal and writes to an output to change the level on an external signal.

logic 1 — A voltage level approximately equal to the input power voltage (V_{DD}).

logic 0 — A voltage level approximately equal to the ground voltage (V_{SS}).

MC — Motor Control

MCU — Microcontroller Unit. A complete computer system, including a CPU, memory, a clock oscillator, and input/output (I/O) on a single integrated circuit.

MW — Metrowerks Corporation

PCM — PC master software for communication between PC computer and system

Freescale Semiconductor, Inc.

For More Information On This Product,
Go to: www.freescale.com

phase-locked loop (PLL) — A clock generator circuit in which a voltage controlled oscillator produces an oscillation which is synchronized to a reference signal.

PMP — PC master software project file

PVAL — PWM value register of motor control PWM module of 56805 controller. It defines the duty cycle of generated PWM signal.

PWM — Pulse Width Modulation

reset — To force a device to a known condition.

SCI — See "serial communication interface module (SCI)."

SDK — Software Developement Kit - SW pack with drivers and algorithms for DSP (to be find on the Motorola WWW)

serial communications interface module (SCI) — A module that supports asynchronous communication.

serial peripheral interface module (SPI) — A module that supports synchronous communication.

software — Instructions and data that control the operation of a microcontroller.

software interrupt (SWI) — An instruction that causes an interrupt and its associated vector fetch.

SPI — See "serial peripheral interface module (SPI)."

SR — switched reluctance motor.

timer — A module used to relate events in a system to a point in time.

Freescale Semiconductor, Inc.

For More Information On This Product,
Go to: www.freescale.com

Glossary

Freescale Semiconductor, Inc.

For More Information On This Product,
Go to: www.freescale.com

Freescale Semiconductor, Inc.

HOW TO REACH US:

USA/EUROPE/LOCATIONS NOT LISTED:

Motorola Literature Distribution;
P.O. Box 5405, Denver, Colorado 80217
1-303-675-2140 or 1-800-441-2447

JAPAN:

Motorola Japan Ltd.; SPS, Technical Information Center,
3-20-1, Minami-Azabu Minato-ku, Tokyo 106-8573 Japan
81-3-3440-3569

ASIA/PACIFIC:

Motorola Semiconductors H.K. Ltd.;
Silicon Harbour Centre, 2 Dai King Street,
Tai Po Industrial Estate, Tai Po, N.T., Hong Kong
852-26668334

TECHNICAL INFORMATION CENTER:

1-800-521-6274

HOME PAGE:

http://motorola.com/semiconductors

Information in this document is provided solely to enable system and software implementers to use Motorola products. There are no express or implied copyright licenses granted hereunder to design or fabricate any integrated circuits or integrated circuits based on the information in this document.

Motorola reserves the right to make changes without further notice to any products herein. Motorola makes no warranty, representation or guarantee regarding the suitability of its products for any particular purpose, nor does Motorola assume any liability arising out of the application or use of any product or circuit, and specifically disclaims any and all liability, including without limitation consequential or incidental damages. “Typical” parameters which may be provided in Motorola data sheets and/or specifications can and do vary in different applications and actual performance may vary over time. All operating parameters, including “Typicals” must be validated for each customer application by customer’s technical experts. Motorola does not convey any license under its patent rights nor the rights of others. Motorola products are not designed, intended, or authorized for use as components in systems intended for surgical implant into the body, or other applications intended to support or sustain life, or for any other application in which the failure of the Motorola product could create a situation where personal injury or death may occur. Should Buyer purchase or use Motorola products for any such unintended or unauthorized application, Buyer shall indemnify and hold Motorola and its officers, employees, subsidiaries, affiliates, and distributors harmless against all claims, costs, damages, and expenses, and reasonable attorney fees arising out of, directly or indirectly, any claim of personal injury or death associated with such unintended or unauthorized use, even if such claim alleges that Motorola was negligent regarding the design or manufacture of the part.

MOTOROLA

Motorola and the Stylized M Logo are registered in the U.S. Patent and Trademark Office. digital dna is a trademark of Motorola, Inc. All other product or service names are the property of their respective owners. Motorola, Inc. is an Equal Opportunity/Affirmative Action Employer.

© Motorola, Inc. 2003

DRM026/D

For More Information On This Product,
Go to: www.freescale.com

Freescale Semiconductor, Inc.