Introduction to Freescale Digital Signal Controllers (DSC)

AMF-IND-T1250

Randy Ryder
Product Manager

October 2013

Agenda

- What is digital power conversion
- Freescale portfolio
- Target applications
- Enablement

Agenda

- What is digital power conversion
- Freescale portfolio
- Target applications
- Enablement

Digital Power Conversion

"Digital Power Conversion" is a power system that is controlled by digital circuits, in much the same way as would be with analog circuits, to monitor, supervise, communicate and control looping.
A fully digitally controlled power system includes both "Digital Control" and "Digital Power Management"

Digital Control

Power switch control feedback or feed forward loop, which is controlled by the digital circuit or programmable controller regulates the output of the power system by driving the power switch duty cycle using pulse width modulation techniques

Advanced adaptive control system,the control circuits combine A/D conversion, pulse width modulation, communication interfaces, operating entirely or mostly in digital mode to gain excellent system performance

+

Digital Power Management

A digital circuit or programmable controller provides the functions of configuration, diagnosis, monitoring , protection, supply sequencing, and communication with the Environment.

Analog vs. Digital Power Control System

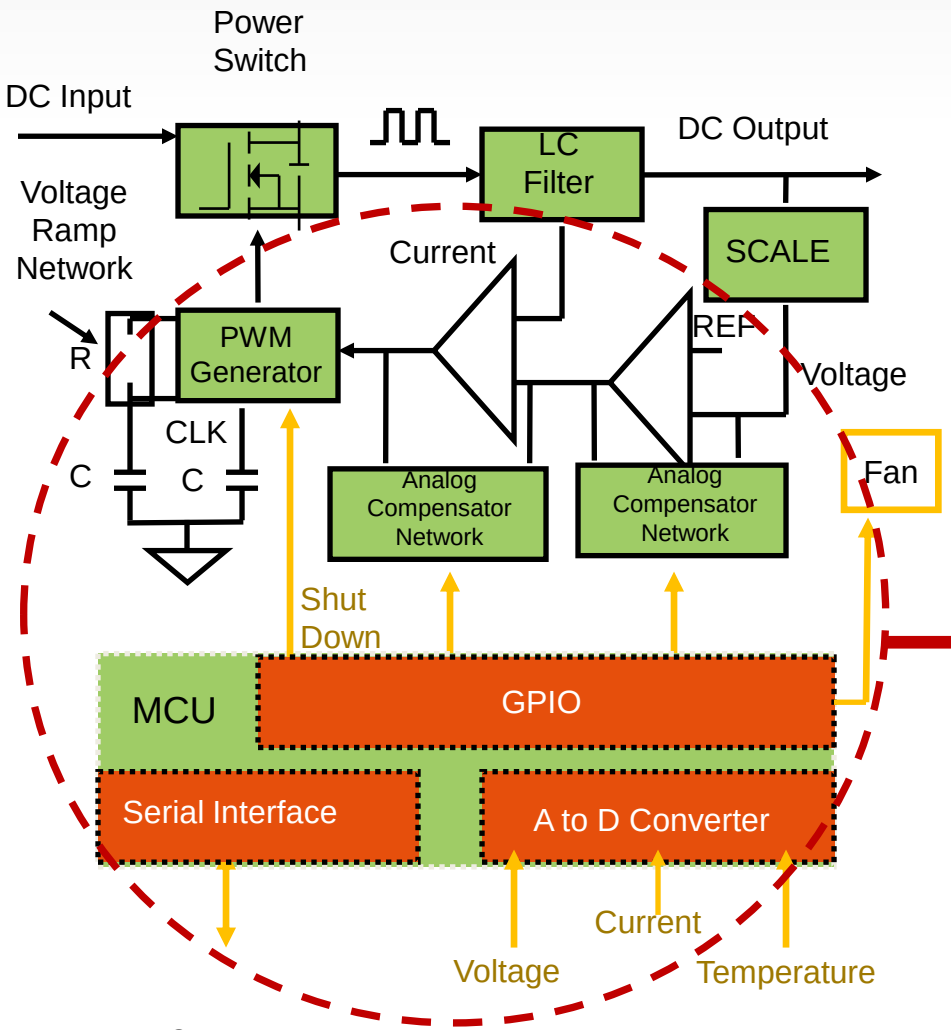

Analog "Control" System With "Digital Management"

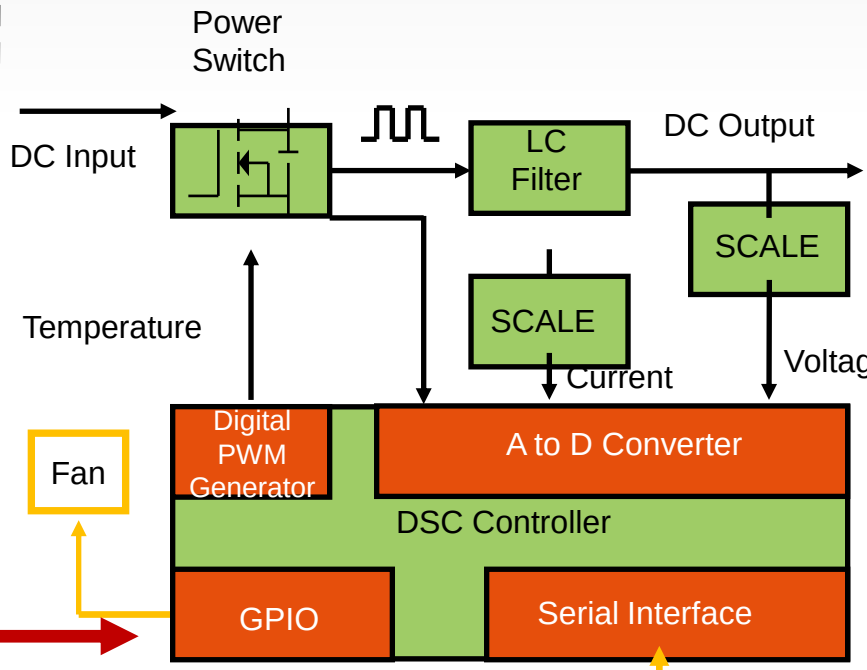

Both MCU and Analog PWM controller are replaced by one DSC

Full Digital Control System "Digital Power Management"

Driving Factors towards “Digital Control”

There are strong trends in the Switch Mode Power Supply (SMPS) market to switch to Digital Control from analog.

Disadvantages of Analog Control:

- Analog control circuitry uses many components, resulting in a large footprint.
- Analog components' values fluctuate with age, temperature and other environmental conditions.
- Control response characteristics of analog control are fixed by discrete component values.
- Analog-based systems are very difficult to test and even more difficult to repair.

Advantages of Digital Control:

- Eliminates potential age, temperature and environmental fluctuations from analog values by converting to digital form and then processes these quantities entirely in the digital domain.
- Enables the ability to perform complex control algorithms. For example, control-response characteristics can be changed in real time to optimize supply operation at every given line or load conditions.
- Eliminates need to use external timing and threshold-setting components
- Eliminates manufacturing variances, temperature gradients and component tolerances associated with the passive discrete components.
- Enables cost reductions in the development as well as in the final production stages by eliminating external components and shrinking board space.
- Protects IP and differentiating technology

The Trends of Power Conversion Technology

- **High Efficiency**
  - Meet Energy Star, 80 plus specifications (www.plugloadsolutions.com/**80Plus**PowerSupplies.aspx)
  - High efficient from light load to full rated load range
  - Cost effective soft-switching techniques
- **High Power Density**
  - Compact size: high watt per cubic inch
- **High Intelligent Control**
  - Digital controlled power conversion
  - Adaptive control algorithms – nonlinear loads and components drift
  - Fast transient response
  - Intelligent power management and communication
- **High Reliability**
  - Less components usage
  - System monitoring and protection
  - Redundancy – load sharing
- **Quiet Operation**
  - Low harmonics, radiated and conducted EMI
- **Innovative Power Distribution**
  - New intermediate bus architecture – eliminate isolated DC/DC converter
- **Lower Cost**

Energy

Digital Power Conversion Applications

- Server Power Supplies
- Uninterruptable Power Supplies
- Board Mounted Power Supplies
- Photovoltaic Power Generation
- Wireless Charging
- Advanced Lighting
- Inductive Cooking
- Electric Vehicles
- & much more

Digital Power Control, Market Drivers

- **Key Parameters:**
  - Core Performance
  - PWM Resolution
  - ADC Conversion Rate
  - Added Value Peripherals

Core Performance:

100MIPS

PMBus; SPI; UART:

Comms

PWM Resolution:

300ps

ADC Conversion Rate:

~ 300ns

Benefits of Digital Power Conversion

- Improves Energy Efficiency
- Simplified Hardware Design
- IP Protection
- Increased Flexibility
- Reduced Components
- Reduced Board Size

Software can accommodate changing temperatures, changing loadings, and aging components

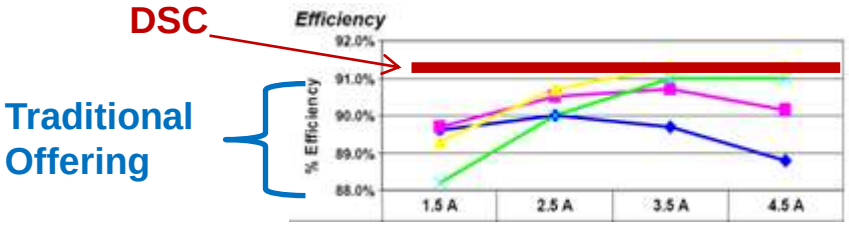

Software can accommodate audible noise elimination

86-135W 136-260W 261-500W

Software can accommodate on the fly topology modifications, predictive modelling, auto-tuning, and much more

Improved Power Density via efficiency improvements reduces costs via smaller heat sinks and smaller board sizes

freescale™

Benefits of Digital Power Conversion

- Free from the effects of component tolerance, parametric drift, aging, etc.
- Configurable feedback loop structure for specific application requirements
- Advanced control law to improve system performance
- Adaptive control to meet overall efficiency control under all operating conditions
- Flexible PWM outputs control to meet all converter topologies
- Upgrade with new features without hardware changes and cost
- Retainable operational data for diagnostic and record keeping
- Diverse communications capabilities
- Reduced component count and inventory cost
- Higher power density due to over all integration
- Shorter R&D cycle, fewer turns of board prototyping
- Portable projects for faster reuse
- Defendable firmware - protects IP and differentiating technology

Benefits of Using Freescale DSC for Power Conversion

- Eliminate the effects of component tolerance, parametric drift, aging, etc
- Dynamic control loop to adjust for varying environmental conditions
- Software creates adaptive system
- Flexible communication capabilities
- Reduced component count and cost due to the overall integration
- Shorter R&D cycle, prototyping migrated to software
- Improved End System Performance
  - Energy savings
  - Quieter operation
  - Improved EMI performance
  - System Cost savings
  - Enhanced Reliability
- **IP protection and technology differentiation**

Agenda

- What is digital power conversion
- Freescale portfolio
- Target applications
- Enablement

56800/E Family Combining Signal Processing & MCU Functionality

Traditional Microcontroller

- Designed for Controller Code
- Compact Code Size
- Easy to Program
- Inefficient Signal Processing

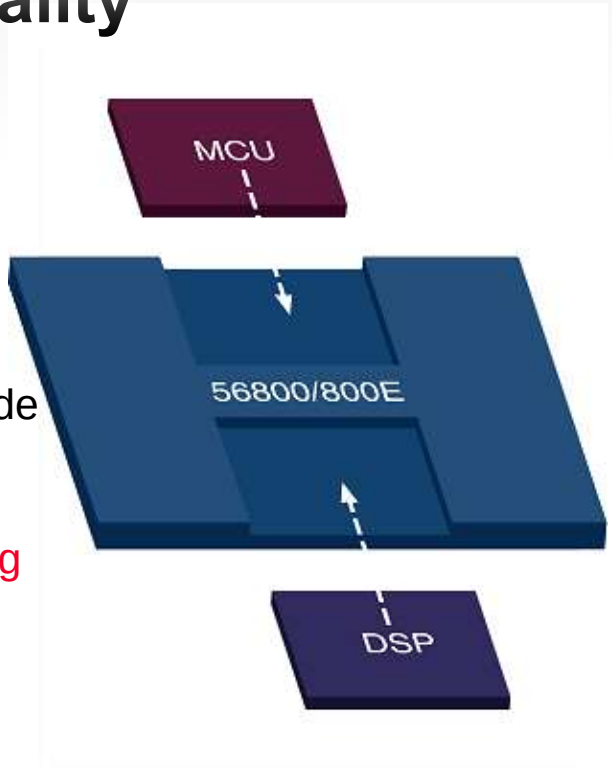

Traditional DSP Engine

- Designed for DSP Processing
- Designed for Matrix Operations
- Complex Programming
- Less Suitable for Control

- Instructions Optimized for Controller Code, DSP, Matrix Operations
- Compact Assembly and “C” Compiled Code Size
- Easy to Program
- Additional MIPS Headroom and extended addressing space

Use Case : Hawk V3 Core

lost cost and low power plus great performance

Consists of three execution units operating in parallel, allowing as many as six operations per instruction cycle. Fast more efficient execution. Data & instruction fetch in parallel.

✓**32bit core support all 32bit arithmetic calculations.**
✓32x32 Instruction increase the accuracy of the control loop and improvement of the floating point calculations.

Enables real time control for applications dependant on the logical correctness of calculations, with the results available in a specific time window

DSC core supports Parallel move, with no-overhead hardware do loop function, enabling advanced control filter (FIR) tap calculations, making it considerably faster than any MCU.

Performance increase to real time control applications : PID16 & 32, Buck Loop Cycling, Advanced digital filtering.

Enables significant "Maths" processing in addition to general purpose functions, delivering greater system efficiency and precision.

Existing Hawk Core is 30% more efficient, MHz to MHZ, than e200z0 Harvard and ARM Cortex CM3 in typical DSC applications

Reduced interrupt latency. 40% faster than hawkv2 on fast interrupt. Improved RTOS Support, via 1clk swap on context switch.

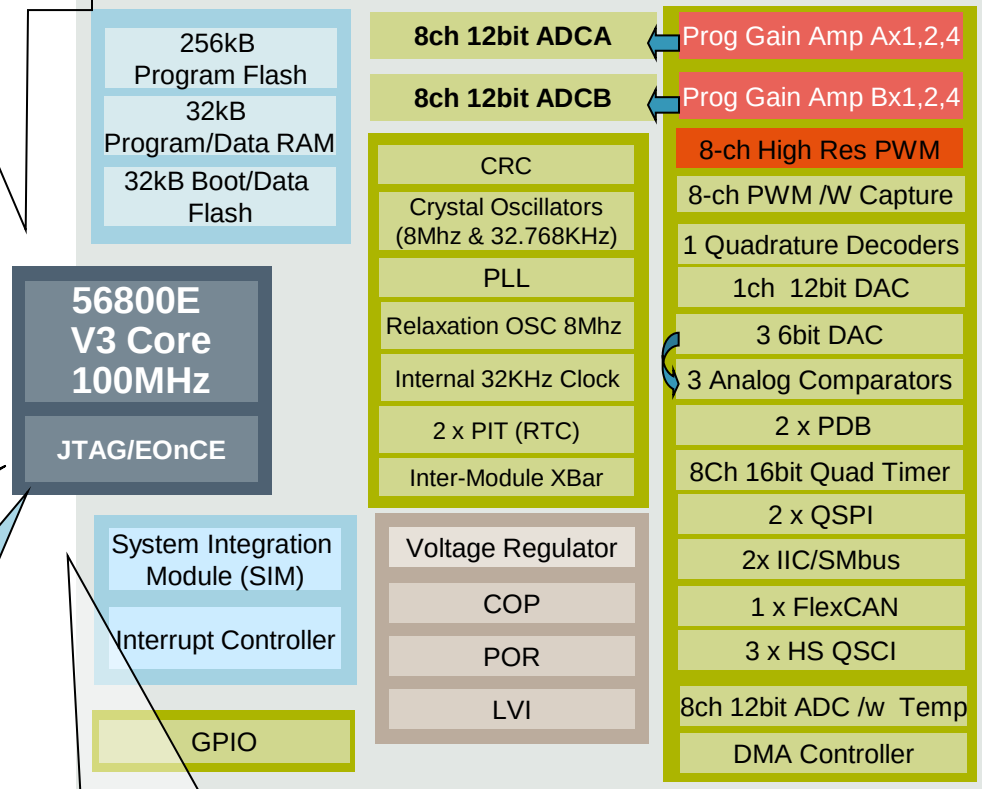

DSP56800E Version 3 Core Improvement

Building on an existing rich 16-bit core instruction set that is ahead of the competition

New Instructions

- 32 x 32 -> 32/64 Multiply and MAC Instructions
  - ✓ IMAC32 - Integer Multiply-Accumulate 32 bits x 32 bits -> 32 bits
  - ✓ IMPY32 - Integer Multiply 32 bits x 32 bits -> 32 bits
  - ✓ IMPY64 - Integer Multiply 32 bits x 32 bits -> 64 bits
  - ✓ IMPY64UU - Unsigned Integer Multiply 32 bits x 32 bits -> 64 bits
  - ✓ MAC32 - Fractional Multiply-Accumulate 32 bits x 32 bits -> 32 bits
  - ✓ MPY32 - Fractional Multiply 32 bits x 32 bits -> 32 bits
  - ✓ MPY64 - Fractional Multiply 32 bits x 32 bits -> 64 bits
- Multi-Bit Clear-Set instruction to improve flexibility of peripheral register handling.

Other Features

- Bit Reversed Address Mode For FFT algorithms.
- Swap all address generation Unit Registers with Shadowed registers to reduce Interrupt context switch latency.

Winning with Freescale DSCs in Digital Power

- Ease of use of a microcontroller (MCU) and the processing power of a digital signal processor (DSP)
- Reduced complexity and latency with simplified memory structure, shadowed register set, interrupt prioritization and cache
- 32-bit core improves precision without consuming performance

17

- Very high speed ADCs capture events real time.
- Accurate PWMs improve switching efficiency and control
- Flexibility with the crossbar to simplify pin out and peripheral communication DMA to reduce CPU overhead

- Portfolio scales to exactly fit the applications needs
- Flexible cores scale from 32MHz to 100MHz
- Flash extends from 32kb to 256kb
- Packages range from 28pins to 100pins

- Enhanced customer experience via integrated tools and reference designs
- Code reusable across the complete portfolio
- Extensive SW libraries provide quick project ramp up

freescale™

DSC Roadmap

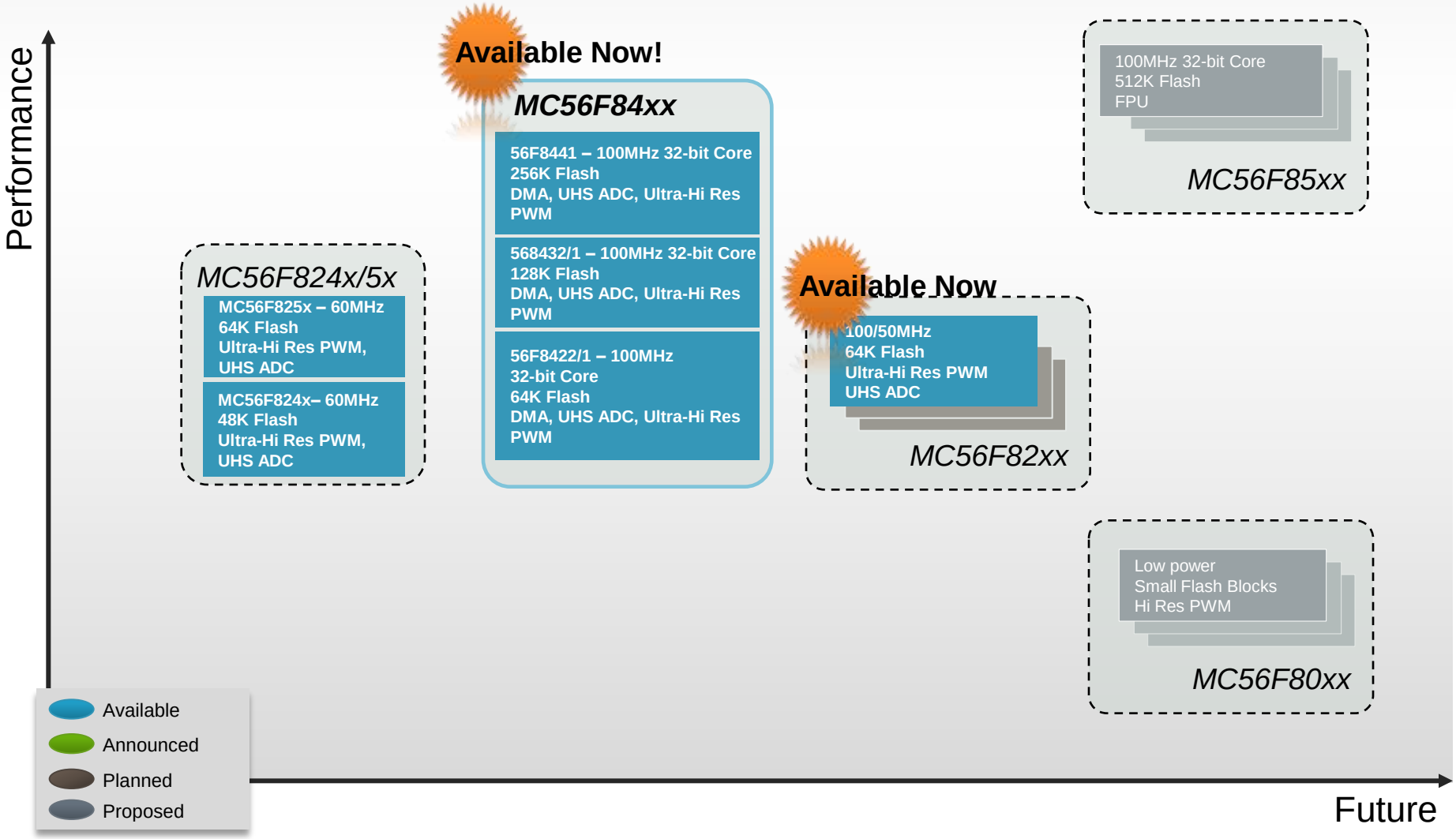
Performance
Available Now!
MC56F84xx
56F8441 – 100MHz 32-bit Core
256K Flash
DMA, UHS ADC, Ultra-Hi Res PWM
568432/1 – 100MHz 32-bit Core
128K Flash
DMA, UHS ADC, Ultra-Hi Res PWM
56F8422/1 – 100MHz
32-bit Core
64K Flash
DMA, UHS ADC, Ultra-Hi Res PWM
100MHz 32-bit Core
512K Flash
FPU
MC56F85xx
MC56F824x/5x
MC56F825x – 60MHz
64K Flash
Ultra-Hi Res PWM,
UHS ADC
MC56F824x– 60MHz
48K Flash
Ultra-Hi Res PWM,
UHS ADC
Available Now
100/50MHz
64K Flash
Ultra-Hi Res PWM
UHS ADC
MC56F82xx
Low power
Small Flash Blocks
Hi Res PWM
MC56F80xx
Available
Announced
Planned
Proposed
Future

Freescale DSC Family Compatibility

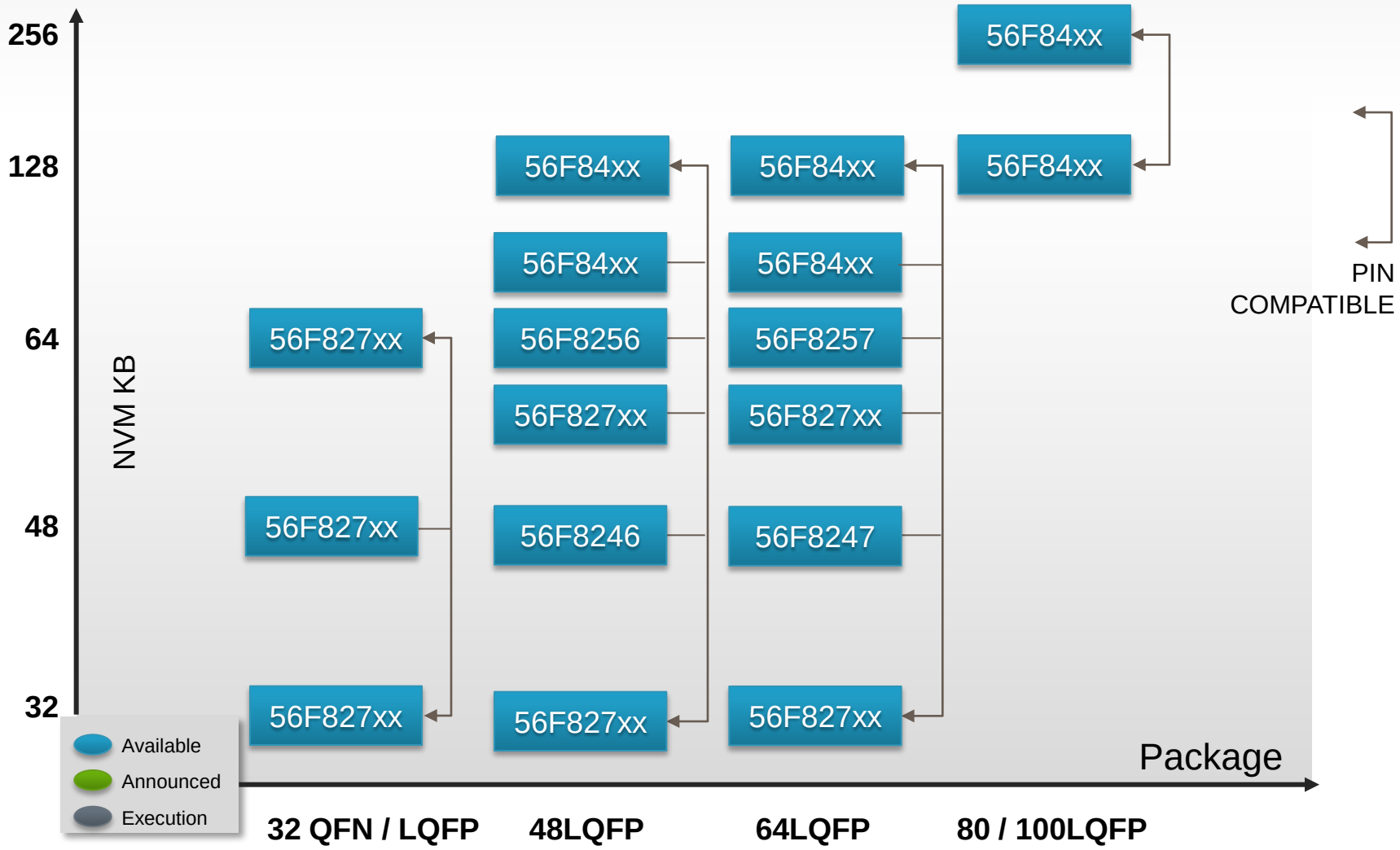

MC56F82xxx (Market Launch Nov'13)

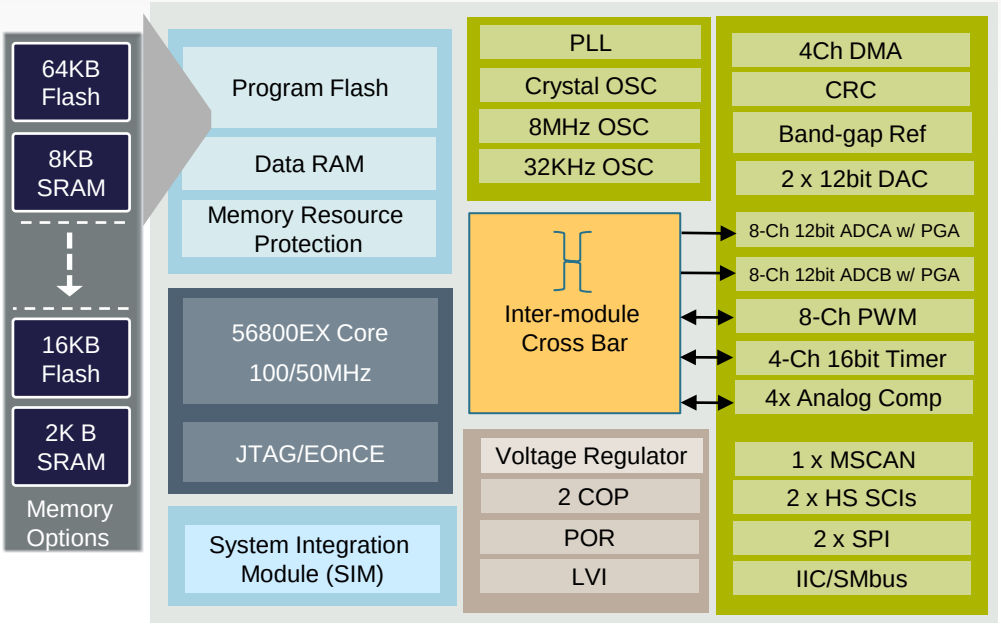

32QFN, 32LQFP, 48LQFP & 64LQFP

Packages are pin compatible
with the MC56F824x/5x and MC56F84xx

Breakthrough Features:

- High speed ADC @ 800ns conversion time
- Nano Edge PWM @ 512ps Resolution
- Inter-module Cross bar
- DMA
- Memory Resource Protection Unit

- **56800EX V3 Core @ 100/50MHz**
- 2.7-3.6V Operation
  - 100MHz from cache & RAM
- Up to 64KB Program FLASH ,with Flash Security
- Up to 8KB Program/Data RAM
- **Memory Resource Protection Unit**
- Up to 100 MHz Peripherals – Timers and SCIs
- **Eight Channel Nano Edge PWM (512ps resolution)**
  - Up to four programmable fault protection input
  - Dead-time insertion
  - Input Capture function
- **2 x12-bit ADCs with total 16 Inputs & PGAs 1x, 2x, 4x**
  - 800ns conversion rate
  - Band-gap reference
- **Four channel DMA controller**
- **Inter Module cross-bar**
- 4 x Comparators with a 6bit Voltage reference
- CRC Generator
- 2 x Windowed Watchdog
- External Watchdog Monitor
- 4 x 16-bit Enhanced Multifunction Programmable Timers
- 2 x 12b DAC
- 2 x High Speed SCI
- 2 x SPI
- 1x I^2C/SMbus Communications Interface
- Software Programmable Phase Locked Loop
- Multiple Clock sources
  - External Crystal/Resonator Oscillator
  - 8MHz/200KHz Tunable Internal Relaxation Oscillator
  - **32KHz Internal RC relaxation Oscillator**
- 5v Tolerant IO
- Error code correction

Open Items

- Industrial temperature:-40C to 105C @ 50MHz
- Extended temperature:-40C to 125C @ 40MHz

MC56F82xxx Family

MC56F	82748	82746	82743	82743	82738	82736	82733	82733	82728	82726	82723	82723	82323	82316	82313
Core MHz	100/50	100/50	100/50	100/50	100/50	100/50	100/50	100/50	100/50	100/50	100/50	100/50	50	50	50
Flash Mem (kB)	64	64	64	64	48	48	48	48	32	32	32	32	32	16	16
SRAM Mem (kB)	8	8	8	8	8	8	8	8	6	6	6	6	6	4	4
Memory Resource Protection	Yes	Yes	Yes	Yes	Yes	Yes	Yes	Yes	Yes	Yes	Yes	Yes	Yes	Yes	Yes
External WD or Windowed Watchdog	1	1	1	1	1	1	1	1	1	1	1	1	1	1	1
External Osc	Yes	Yes	Yes	Yes	Yes	Yes	No	No	Yes	Yes	No	No	No	Yes	No
Cyc ADC Chnl	2x8	2x5	2x3	2x3	2x8	2x5	2x3	2x3	2x8	2x5	2x3	2x3	2x3	2x5	2x3
PWM uE Chanl	1x8	1x6	1x6	1x6	1x8	1x6	1x6	1x6	1x8	1x6	1x6	1x6			
PWM stnd Chanl													1x6	1x6	1x6
12b DAC	2	2	2	2	2	2	2	2	2	2	2	2	0	2	0
DMA	Yes	Yes	Yes	Yes	Yes	Yes	Yes	Yes	Yes	Yes	Yes	Yes	Yes	Yes	Yes
CMP + 6b DAC	4	3	3	3	4	3	3	3	4	3	3	3	2	3	2
QSCI	2	2	1	1	2	2	1	1	2	2	1	1	1	2	1
QSPI	2	1	1	1	2	1	1	1	2	1	1	1	1	1	1
I2C	1	1	1	1	1	1	1	1	1	1	1	1	1	1	1
CAN	1	1	0	0	1	1	0	0	1	1	0	0	0	0	0
GPIO	54	39	26	26	54	39	26	26	54	39	26	26	26	39	26
Pkg	64	48	32	32QFN	64	48	32	32QFN	64	48	32	32QFN	32QFN	48	32

@10k units $2.29 → $1.49

MC56F824/5x vs MC56F82xxx – Feature Matrix

	(MC56F824/5x)	(MC56F82xxx)
Core	56800e V2	56800e V3
Bus Speed	60MHz	40/50MHz
Flash	64kB	64kB
RAM	8kB	6kB
EEPROM	None	None
PWM	520ps resolution	512ps
ADC	500nSecs conversion	800nSecs conversion
PGA's	x1, x2, x4 magnification	X1, x2, x4 magnification
DMA	None	4 channel
Packages	44, 48 & 64 LQFP	32, 48, & 64LQFP
DACs & CMPs	1x12b + 3x5b with CMP	2x6b with CMP
Comms Peripherals	2IIC, 2SCI, 1SPI + 1 MSCAN	1IIC, 2SCI, 2SPI + 1 FlexCAN
Error Code Correction	None	Yes
Price Point	$3 @ 10k	$1.80 @ 10k

Introducing MC56F84xx

The **MC56F84xx** is the market's fastest signal-processing microcontroller for the most efficient digital power conversion

Exceptional Precision Sensing and Control

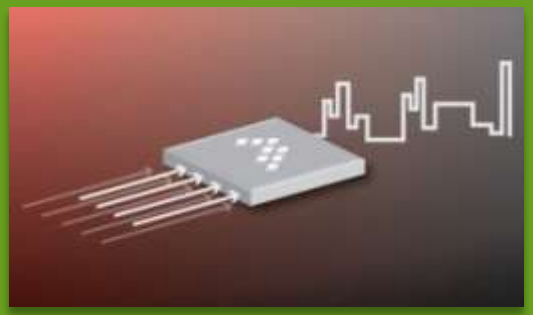

Precision control solution using advanced high speed and accurate peripherals.

Market-Leading Performance

Market's fastest signal-processing microcontroller effortlessly handles demanding control loops and complex math.

Easy Implementation

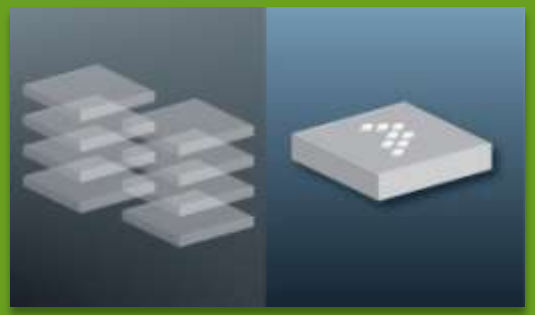

Flexible architecture, plus a wide array of on-demand resources, simplifies and speeds system development.

The Ultimate Solution in Performance and Precision for Green Innovation

freescale™

MC56F84xx Advanced Features and Benefits

Superior Precision:

- *High Res PWM with 312 pico-second resolution for accurate adjustment of the control loops*
- *2x12-bit High Speed ADCs with 3.3 Msps resolution reducing jitter on current and voltage reads*
- *16ch 16b SAR ADC that enables external sensors inputs*
- *4 Analog Comparators with integrated 6-bit DACs that can enable emergency shut down of the PWMs*
- *Integrated PGAs to increase the accuracy of ADCs conversions on small voltages and currents*

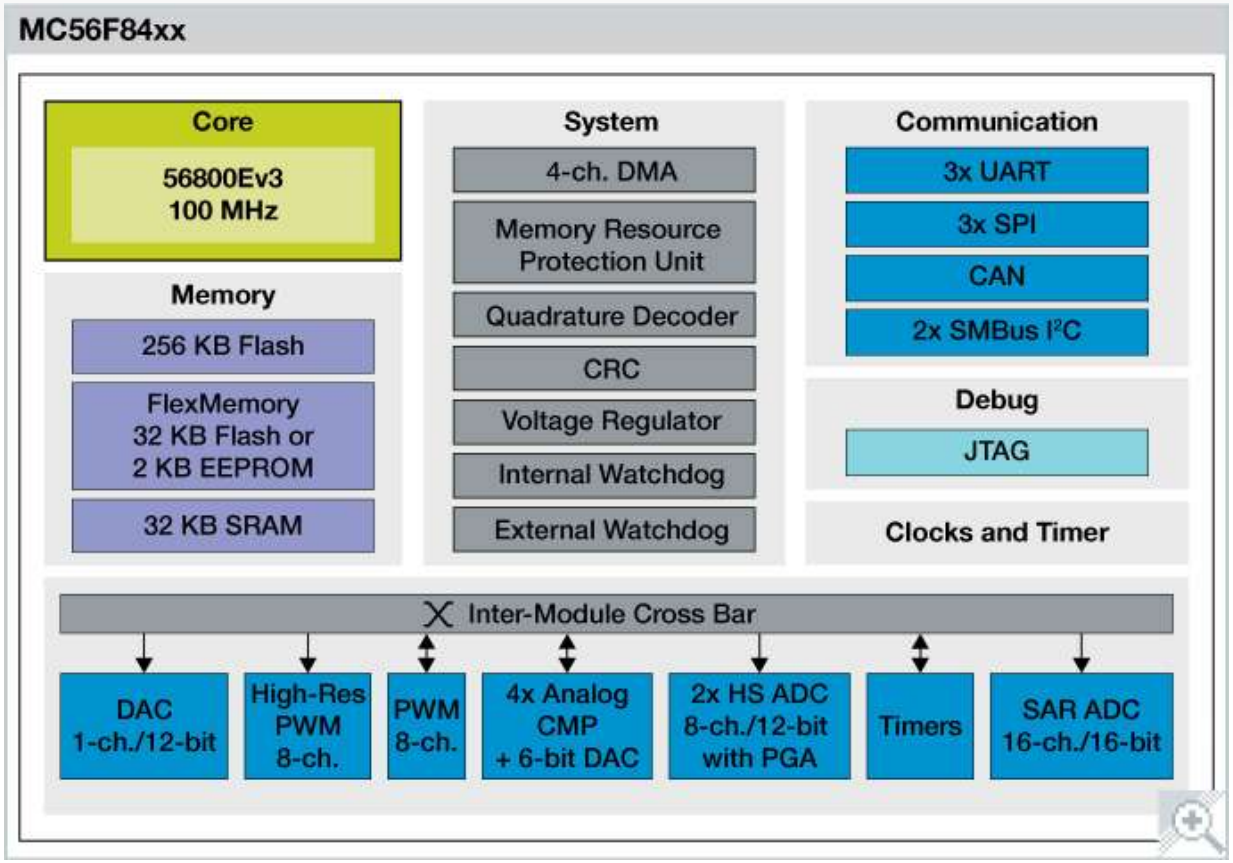

Performance:

- *100MHz/100 MIPS 32-bit core for fast control loop execution via single-cycle math computations and parallel moves*
- *Fractional arithmetic supported for greater accuracy*
- *DMA Controller for reduced core intervention when shifting data from peripherals*

Easy Implementation:

- *5 volt tolerant I/O for lower cost board design*
- *Memory resource protection unit to ease safety certification*
- *Freescale's FlexMemory for simplified data storage*
- *Market-focused software components, reference designs, and development tools for fast knowledge ramp up*

freescale™

MC56F84xx Advanced Features and Benefits

Features	Benefits
High Res PWM with 312 pico-second resolution	Provides precise and stable control across extended temperatures
Dual, low-power 12-bit ADC with built-in PGA sampling up 3.3 mega samples per second (Msps)	Improves real-time control for an environmentally more efficient design
100MHz/100MIPS 32-bit core, optimized for digital signal processing	Increases the execution of the control loop
Program flash memory scales from 64 KB to 256 KB	Enables flexibility
Direct memory access (DMA)	Helps ensure fast data transfers without core interruption
Market-focused software components, reference designs and development tools designed by our experts, deployed via software tools and made available through our online experience	Simplifies and speeds system development
5 volt tolerant I/O	Offers flexibility and system cost reduction
Memory protection features	Restricts access to key modules, helping to ensure reliable solutions
Freescale FlexMemory EEPROM capability	Supports frequent event captures

Freescale Solution – Highly Integrated controllers

- **High performance Nonvolatile Memory – Flash memory**
  - Fast access speed, small page size enables user to designate a flash page as EEPROM
  - Longer Data retention and higher program erase cycles
  - Wide operating temperature range (-40C to 125C ambient operating temperature)
- **High speed/flexible PWM module**
  - Improved PWM resolution on both duty cycle and frequency – Resonant converter applications
  - Arbitrary PWM pulse generation which can be used for any power stage topology
- **High speed, 12-14 bits Analog-to-Digital Converter**
  - High input impedance
  - Various power operating modes
- **High performance On-chip Analog Modules - DACs, Comparators, Programmable Gain Amplifiers – Allowing analog designer to work in digital control world**
  - Low offset, lifetime drift and gain error
  - Programmable comparator hysteresis
  - Adaptive slope compensation for peak current mode control
- **Low Cost**
  - System cost lower than the existing analog plus MCU system

Agenda

- What is digital power conversion
- Freescale portfolio
- Target applications
- Enablement

Today's typical digital control topology of SMPS

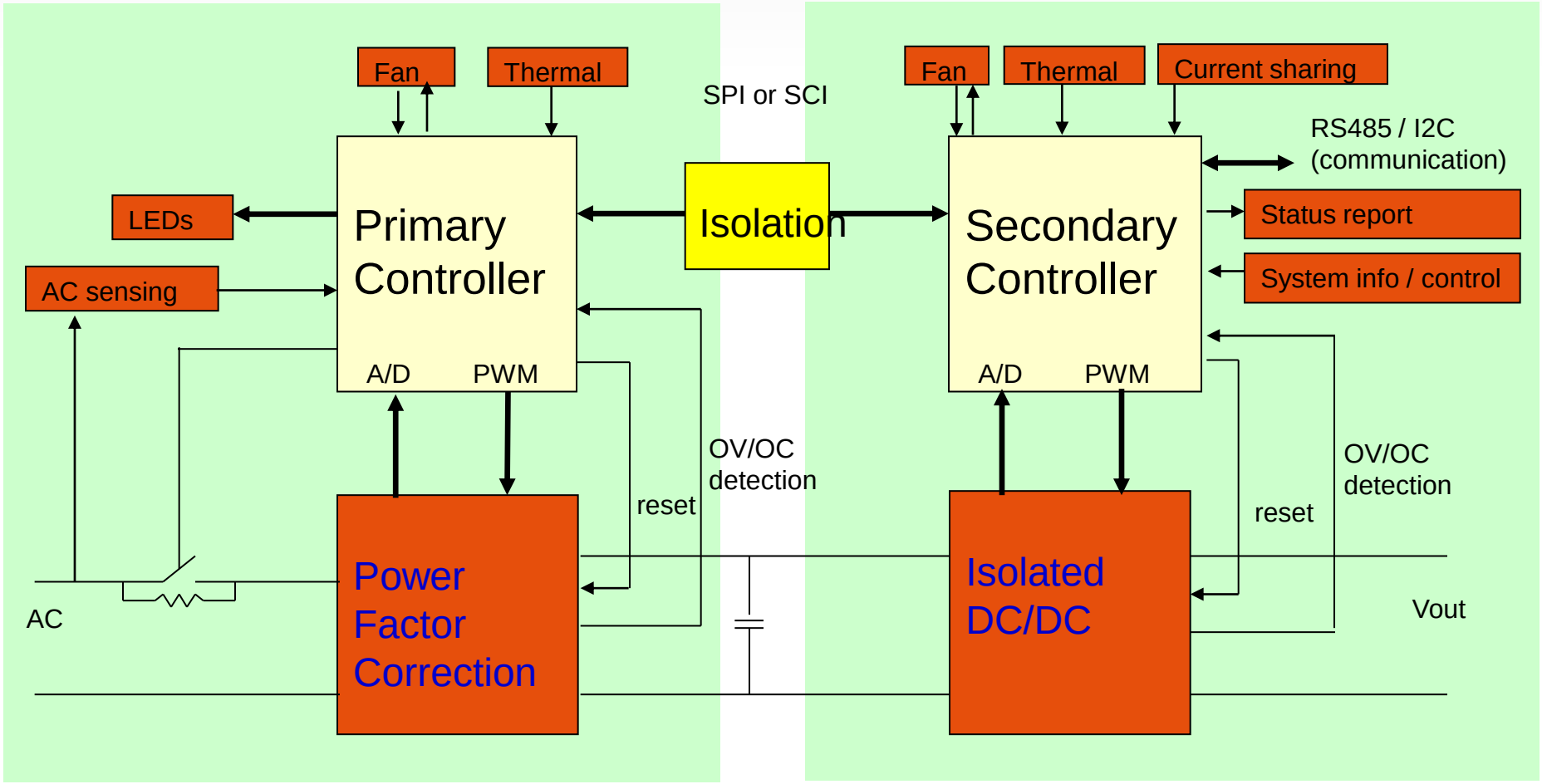

Typical Photovoltaic System – Freescale Focus Areas

Smart Metering
- MCF51EM, Kinetis, S08GW, MCF5441x

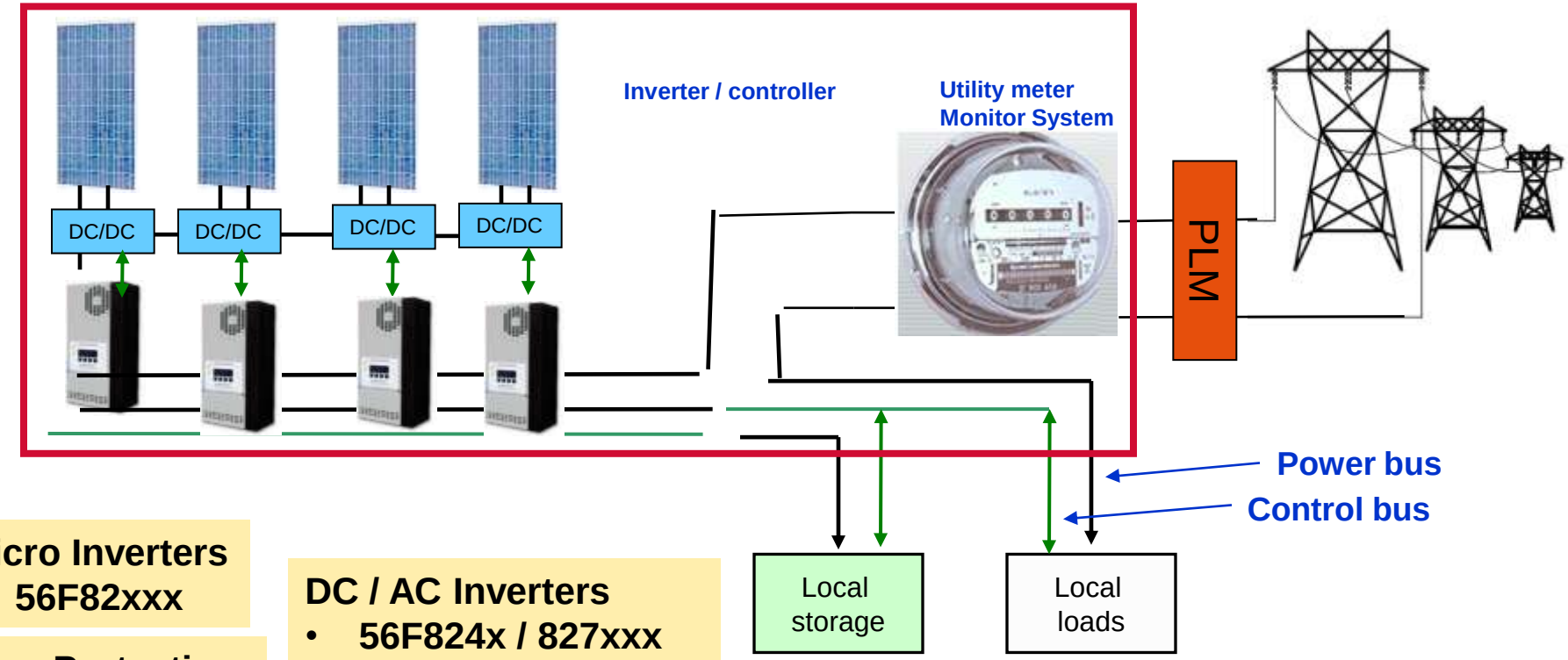

Micro Inverters
- 56F82xxx

Surge Protection
- 56F82xxx
- S08 MCU

DC / AC Inverters
- 56F824x / 827xxx

Battery Chargers
- 56F827xxx
- S08 MCU

Sensor/Analog
- CAN i/f
- Pwr Mgmt

…C56F84xx Use case – Solar Inverter

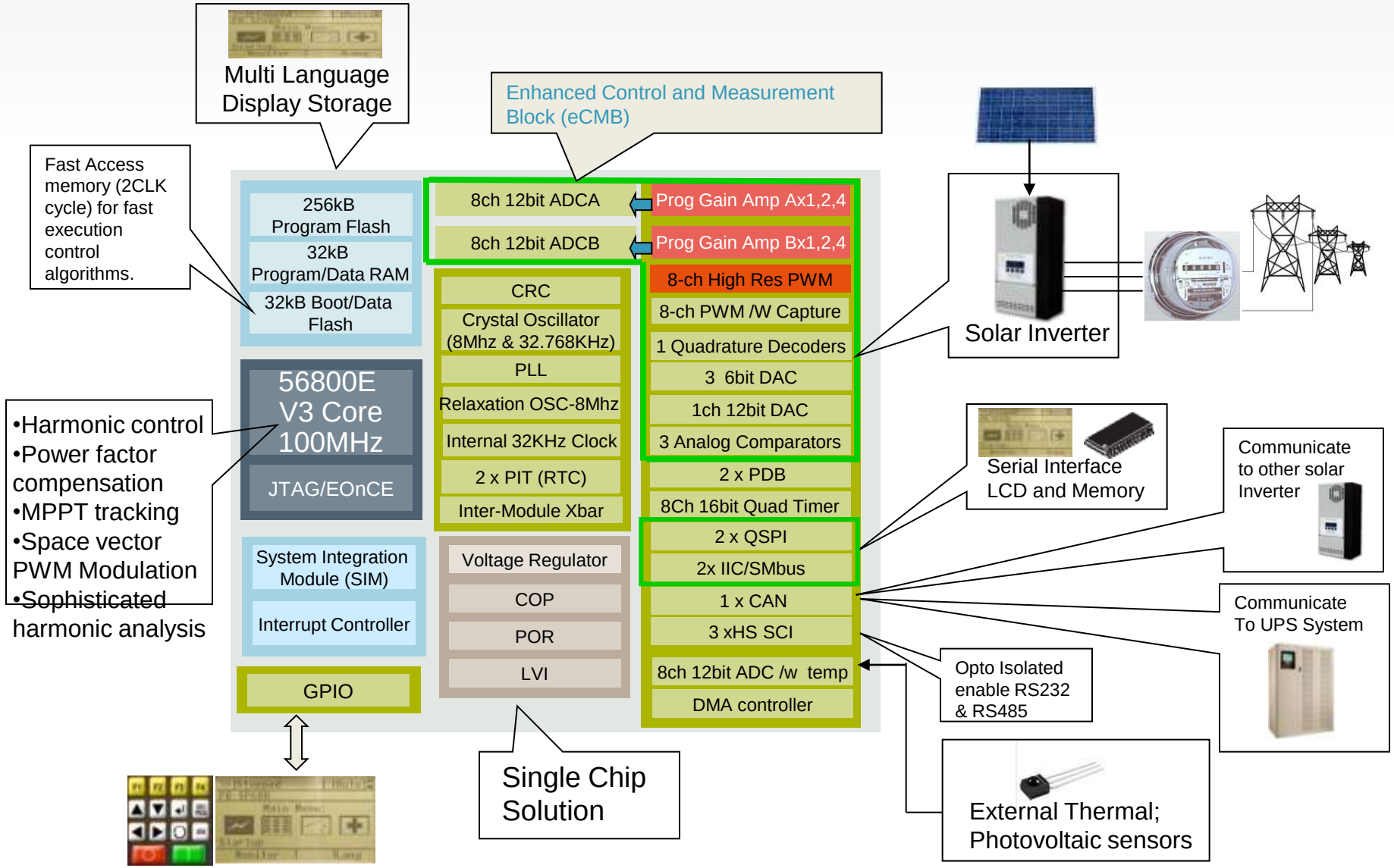

Microinverter Example

Isolated DC/AC Inverter

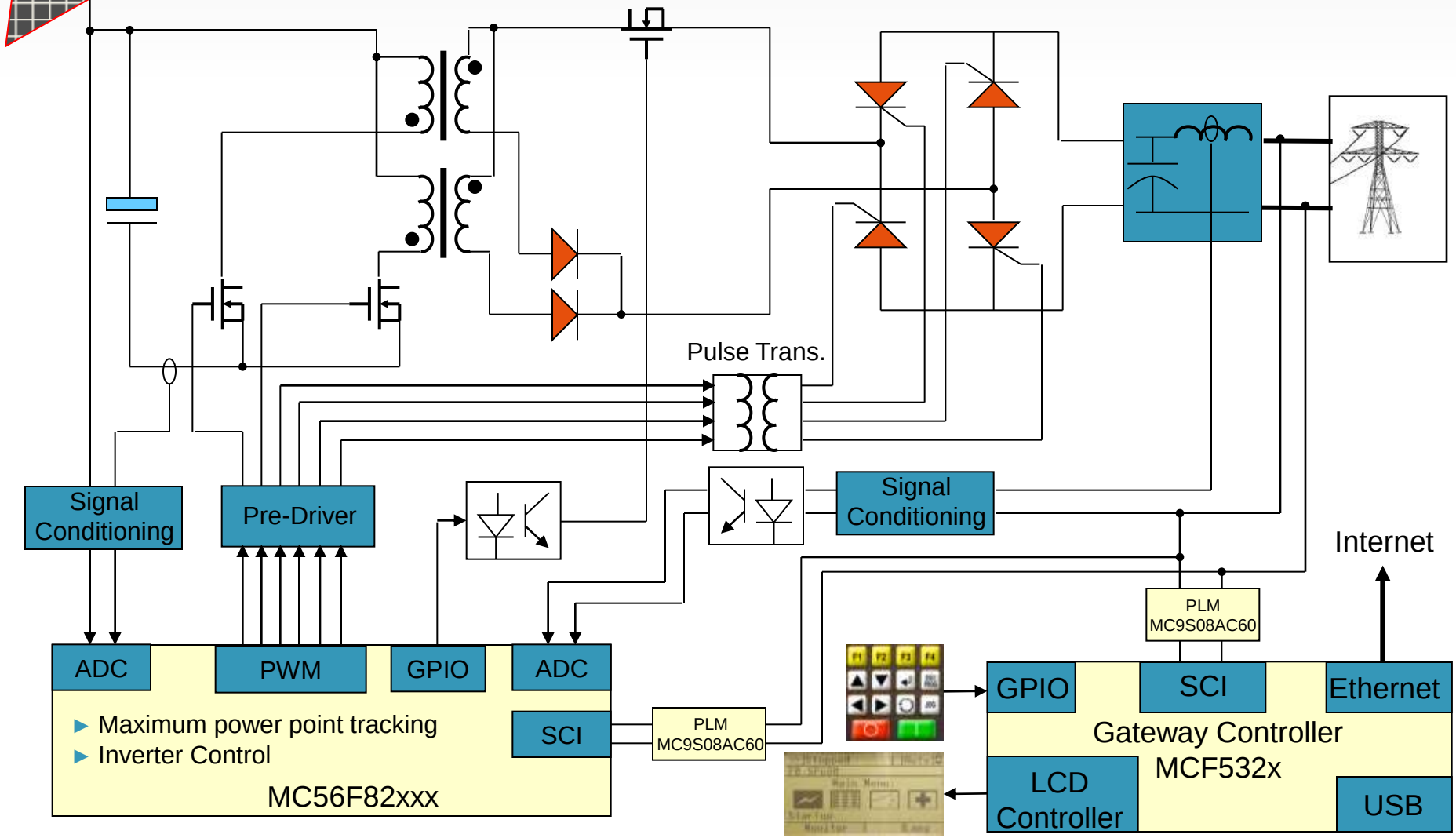

Digital Dimming Ballast Application Example

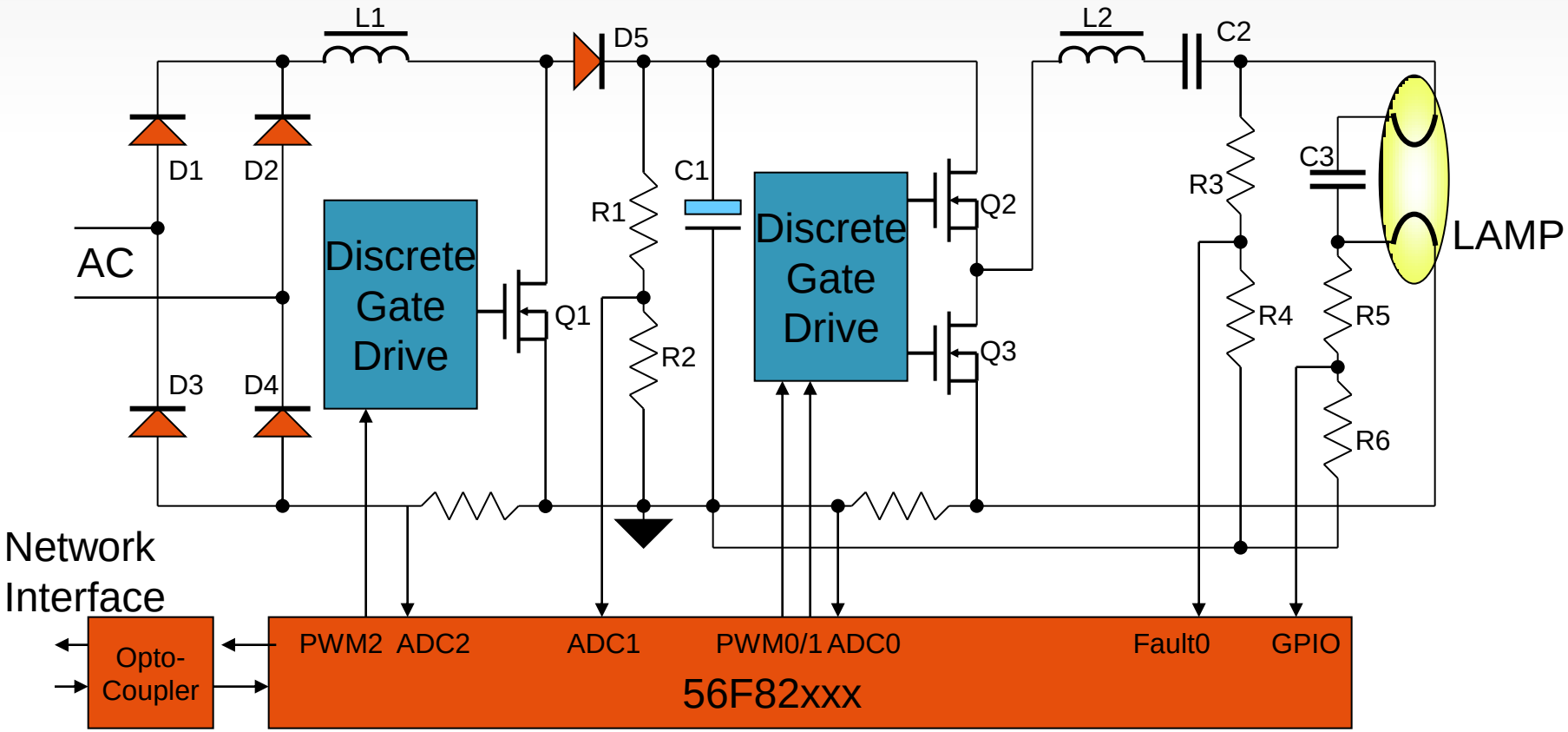

- Feature
  - One hardware can be used for different tubes
  - Control Algorithms and functionalities implemented in software
  - Low number of components usage which means low manufacturing cost

…C56F84xx Use case – UPS

Multi Configuration Storage

Enhanced Control and Measurement Block (eCMB)

Control Power Supply

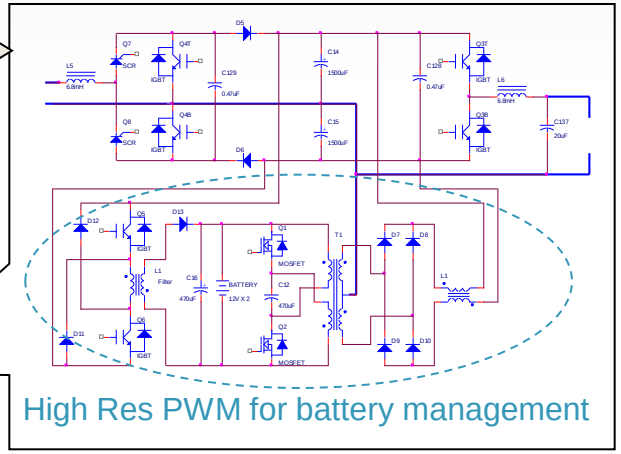

High Res PWM for battery management

- Harmonic control
- Power factor compensation
- Battery management
- Support Multi language HMI
- RTOS support

256kB Program Flash
32kB Program/Data RAM
32kB Boot/Data Flash

56800E V3 Core 100MHz

JTAG/EOnCE

System Integration Module (SIM)

Interrupt Controller

GPIO

8ch 12bit ADCA
8ch 12bit ADCB

CRC
Crystal Oscillator (8Mhz & 32.768KHz)
PLL
Relaxation OSC-8Mhz
Internal 32KHz Clock
2 x PIT (RTC)
Inter-Module Xbar

Voltage Regulator
COP
POR
LVI

Prog Gain Amp Ax1,2,4
Prog Gain Amp Bx1,2,4
8-ch High Res PWM
8-ch PWM /W Capture
1 Quadrature Decoders
3 6bit DAC
1ch 12bit DAC
3 Analog Comparators
2 x PDB
8Ch 16bit Quad Timer
2 x QSPI
2x IIC/SMbus
1 x CAN
3 xHS SCI
8ch 12bit ADC /w temp
DMA controller

Serial Interface Memory

UPS Network

Isolated RS485 & RS232 communication

Sensors:
1)Temperature
2) Flow

RTOS support

Single Chip Solution

Agenda

- What is digital power conversion
- Freescale portfolio
- Target applications
- Enablement

Tools and Software

Modular, expandable and cost-effective development platform TWR-56F84789-KIT

FreeMASTER

Allows control of an application remotely from a graphical environment running on a PC

CodeWarrior

Comprehensive IDE that provides a highly visual, automated framework to accelerate development of some of the most complex embedded applications

Math / DSP Libraries

Market-focused software components increasing ease of use and helping decrease time to market

QEDesign

Complimentary filtering tool ideal for designing FIR and IIR filters

Processor Expert

Rapid application design tool that combines easy-to-use component-based application creation with an expert knowledge system

Reference Designs

Complimentary gerbers, code and schematics for:

- LLC resonant converter
- Solar power conversion

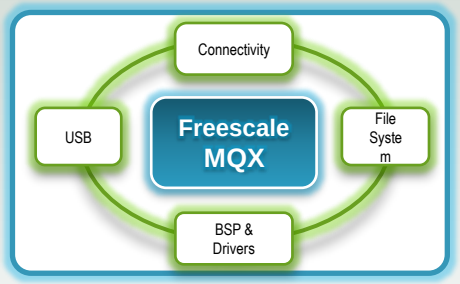

Accelerate design success with complimentary RTOS that is simple to fine-tune for custom applications and scalable to fit requirements

Freescale Embedded Software Libraries

Target Devices/Platforms:
- MCF56F8xxx

Range of Applications:
- Digital Control Systems
- Motor Control (BLDC, PMSM, AC)

Highlights/Description:
- Software modules implemented in assembly
- Optimized for speed
- C-callable interface
- Easy to use
- Fully documented

Public Deliverables:
- **General Function Library (GFLIB)** contains math, trigonometric, look-up table and control functions. These software modules are basic building blocks.
- **Motor Control Library (MCLIB)** contains vector modulation, transformation and specific motor related functions to build digitally controlled motor drives.
- **General Digital Filter Library (GDFLIB)** contains filter functions for signal conditioning.
- **Advanced Control Library (ACLIB)** will contain functions to enable building the variable speed AC motor drive systems with field oriented control techniques without position or speed transducer (will be available soon).

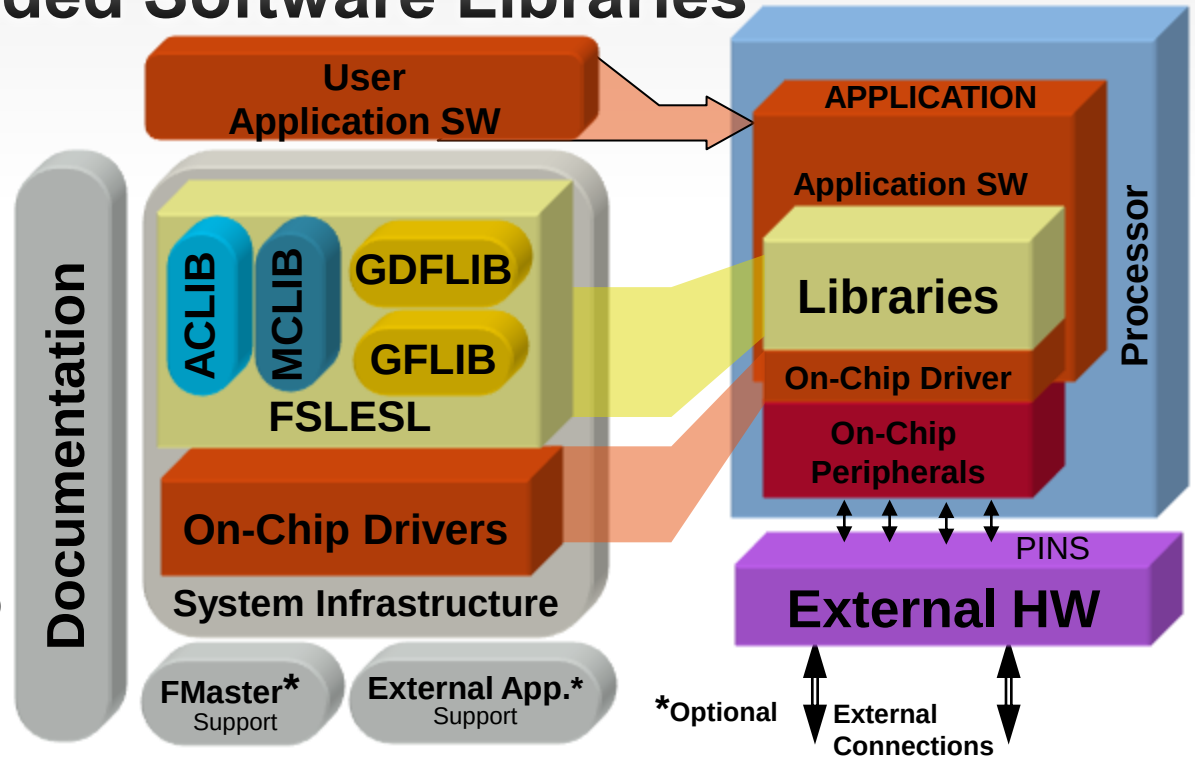

http://www.freescale.com/webapp/sps/site/prod_summary.jsp?code=FSLESL&fsrch=1

The Freescale Tower System

- Modular development platform for 8/16/32-bit MCUs & MPUs
  - Quickly combine Tower Modules to build a prototype of your application
  - Modules sold individually or in kits
  - Open Source: Build your own Tower Module to integrate your IP
  - Cost-optimized hardware
  - Software support from Freescale and Third Parties
  - Growing community of Third Party hardware support
  - On-line community: **www.towergeeks.org**

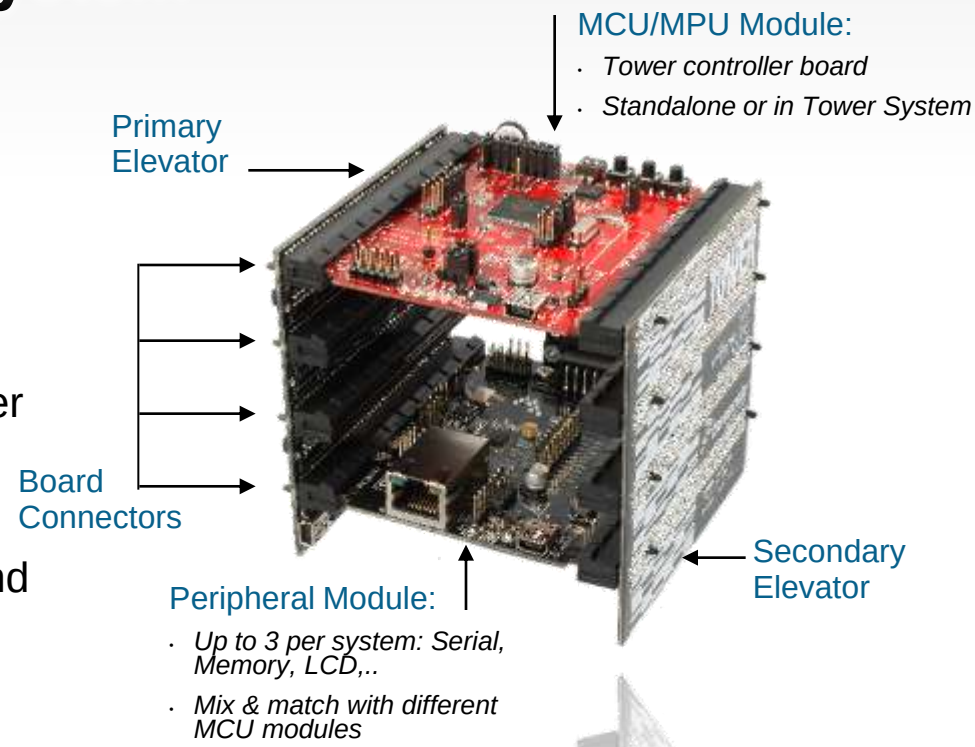

Rapidly build a prototype of your end application

Support for all ColdFire+ and Kinetis MCUs!


TWR-MEM


TWR-LCD


TWR-SENSOR-PAK

Solar Panel Inverter Demo

Target Devices/Platforms:

- DSC controlled DC to AC Inverters
- Solar Energy Harvesting
- UPS

Applications Usage:

- As DEMO application for the solar energy to power line conversion
- Small power line source for home usage
- Functions as UPS when battery connected

Application Features:

- DC to AC Inverter for solar panel is DSC controlled inverter with battery charger option
- Nominal input voltage is 36V – it represents one 36V panel, or two 18V panels in series, or three lead-acid batteries in series – each of 12V
- Output power is max 400VA / 230V AC / 50Hz
- Can work as grid connected or no
- The MPPT algorithm is implemented to maximize output power from the solar panel
- High frequency power transformer is used to maintain isolation between solar panels and grid connected power line
- The switching frequency is up to 50kHz
- The DC-DC up-converter and full bridge topology is used for the AC voltage generation
- Fault protection implemented – over-current, short-circuit and input under-voltage
- Isolated serial link RS-485 used for connection to whole system

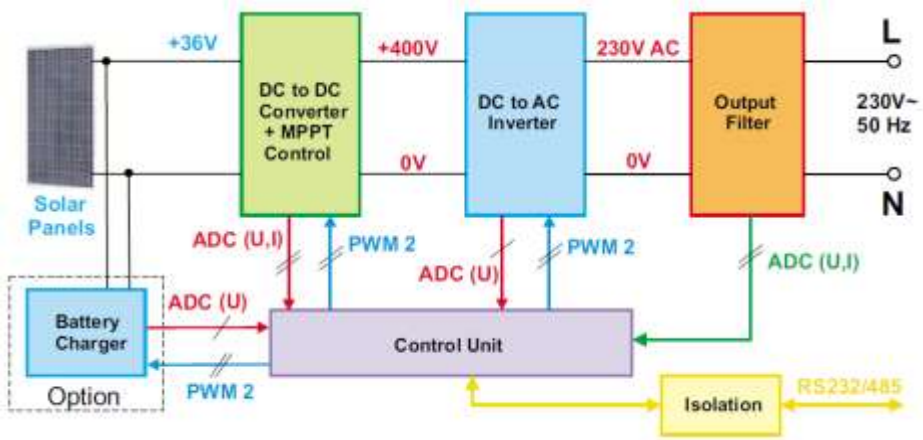

AC to DC SMPS Demo

Target Devices/Platforms:

- Switch Mode Power Supply
- DSC:
  - MC56F80xx Family
  - MC56F82xx Family

Applications Usage:

- As DEMO application for AC/DC conversion
- Communication power supply
- Server power supply
- Digital power supply

Application Features:

- General:
  - 1-phase 500W SMPS with MC56F8013 and MC
- Input:
  - 45-65 Hz Operating Frequency Range
  - 85V - 265V Operating Voltage Range
  - Power factor at input > 0.9
  - Conversion efficiency > 90%
  - Total Harmonic Distortion < 10%
- Output:
  - Output voltage 12V/41A
  - Output voltage 5V/25A
- Communications:
  - serial communication (SCI) between controllers with opto-isolation
  - serial communication (SCI) of sec. side controller(MC56F82xx) with host PC with opto-isolation
  - serial communication (IIC) of sec. side controller(MC56F82xx) via PM Bus

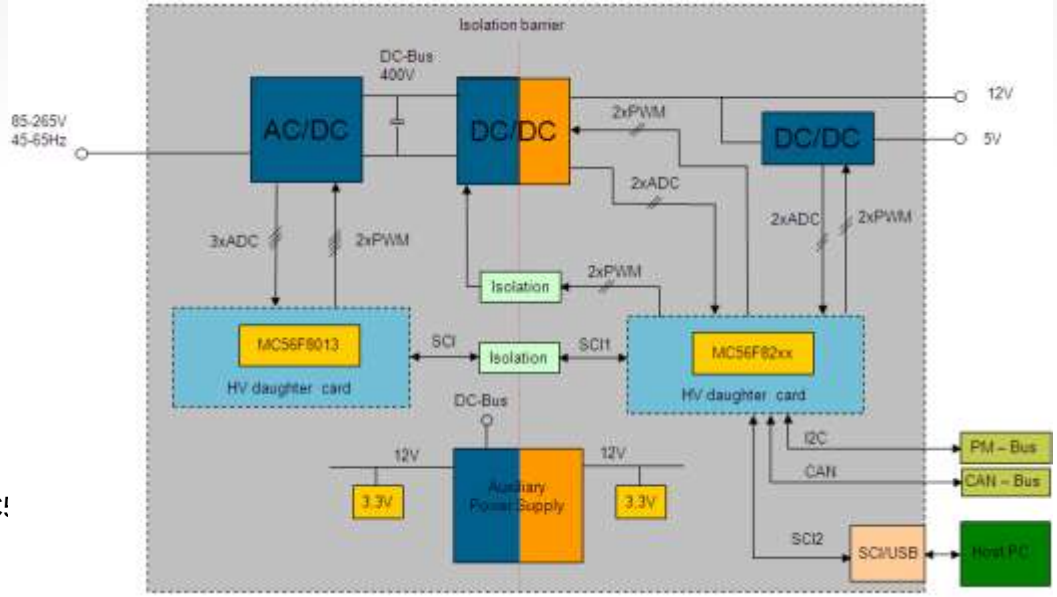

FreeMaster Monitoring Tool

- Application control and monitor
- Live graphs, variable watches, and graphical control page
- Real-time operation monitor
- Supports:
  - HCS08, HC12, HCS12 and HCS12X BDM
  - 56F8000, 56F8100 and 56F8300 JTAG
  - SCI driver (FMASTERSCIDRV) for all platforms

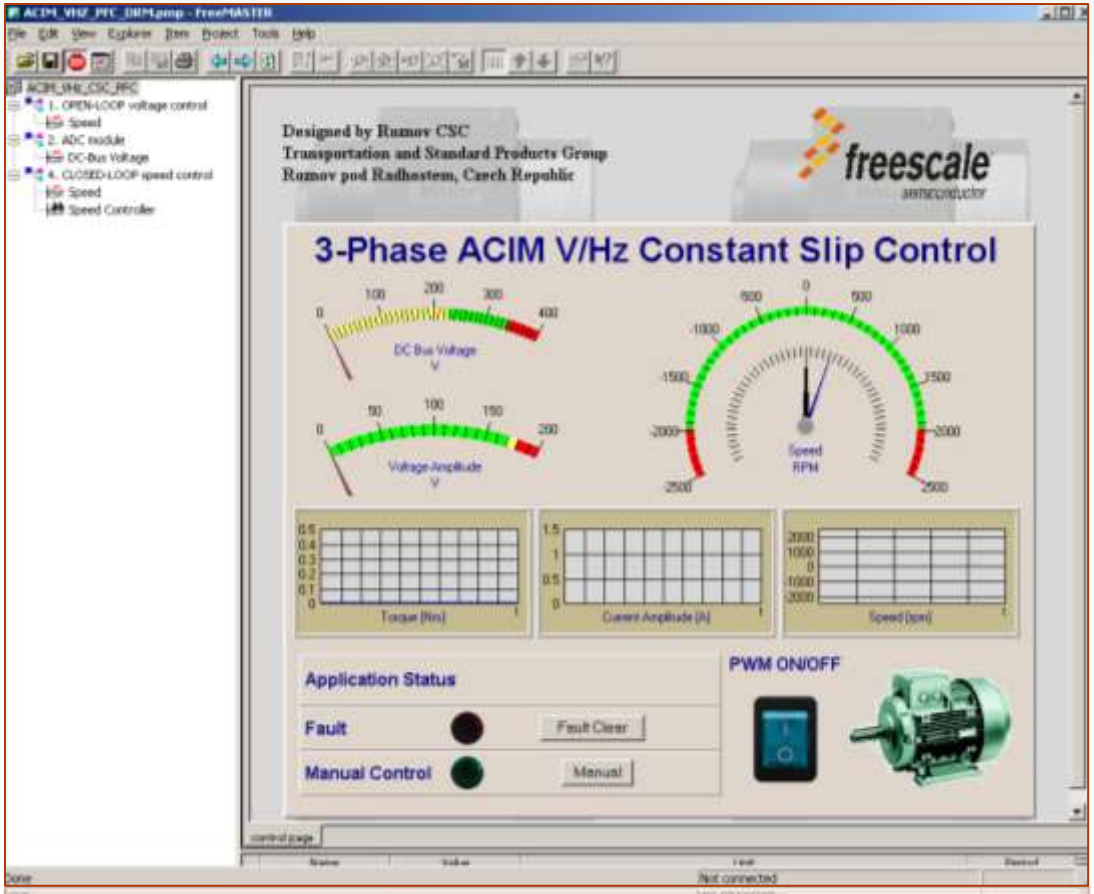

www.freescale.com/webapp/sps/site/prod_summary.jsp?code=FREEMASTER

Processor Expert Features

- Available across DSC product lines
- Rapid application development
- Expert configuration system
- Instant functionality of generated code
- Two Peripheral programming levels
  - Embedded Components
  - PESL
- Application Specific Algorithm Libraries
  - All SDK algorithm libraries ported
- Tested and ready-to-use code

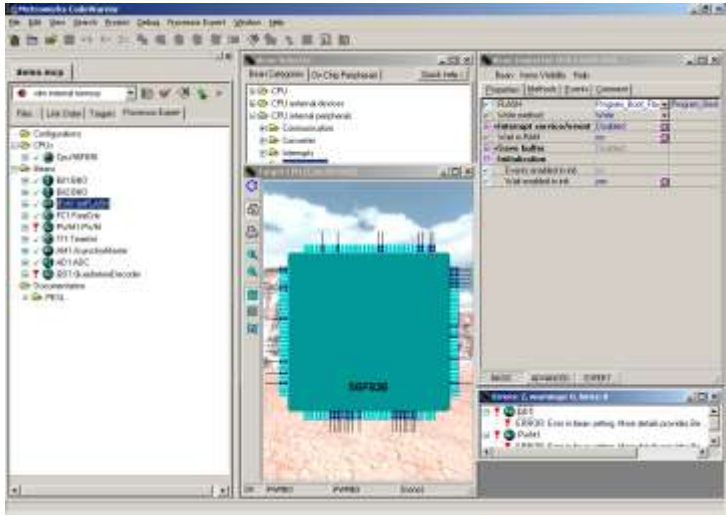

Free Filter Design Tool

- Launch QED Filter Design Package.

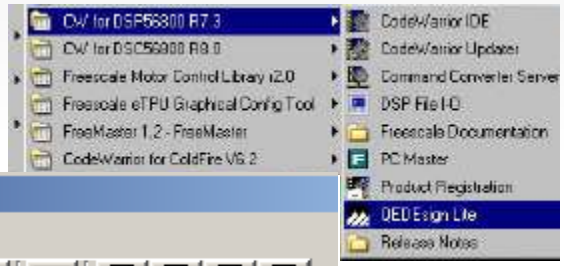

- Select Equiripple FIR Design,

  Lowpass

  .

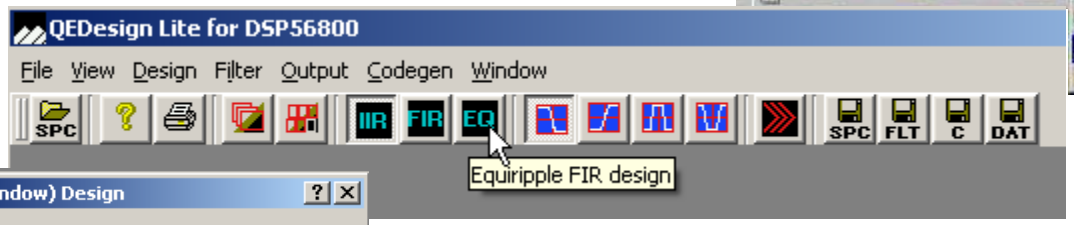

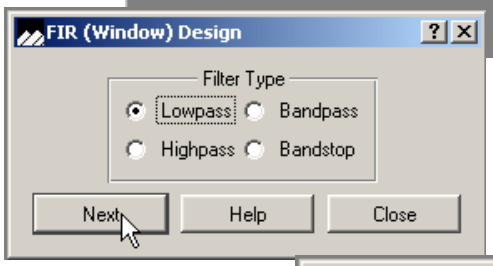

- Input filter parameters, select Next, get 31 taps, select Next.

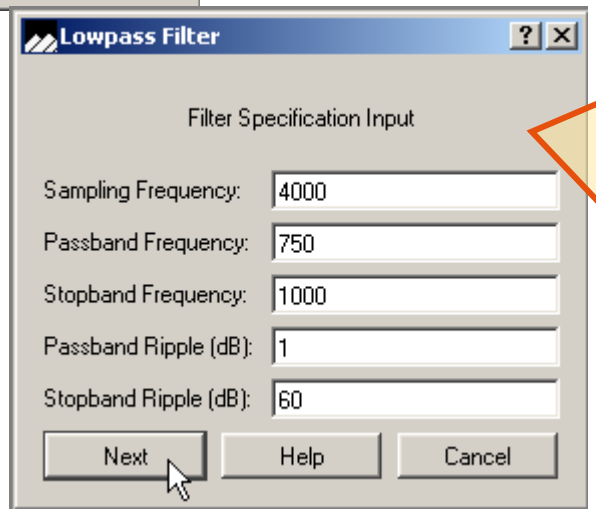

This filter has same normalized trans. bandwidth as prior example:

$$f'_{\Delta} = 0.0625$$

$$N_{taps} \approx 45$$

Only need 31 taps because of 1 dB passband ripple

Links for further information

- www.freescale.com/digitalpower -- Digital Power Homepage
- www.freescale.com/dsc -- Digital Signal Controllers Homepage
- www.freescale.com/codewarrior -- Code Warrior Development Homepage
- www.freescale.com/tower -- Tower Development Systems Information
- www.towergeeks.org – Tower Development Community Page

freescale™

Nano edge PWM

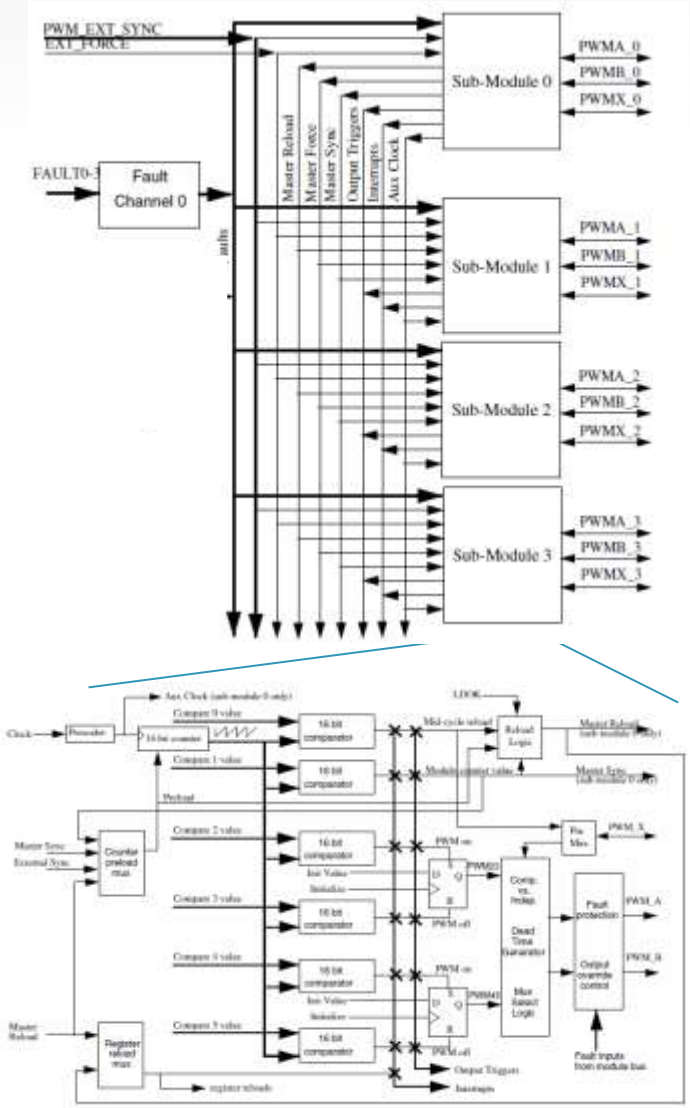

- 16 bits of resolution for centre, edge aligned, and asymmetrical PWMs
- Fractional delay for enhanced resolution of the PWM period and edge placement
- Dithering to simulate enhanced resolution when fine edge placement is not available
- PWM can operate as complementary pairs or independent channels
- Ability to accept signed numbers for PWM generation
- Independent control of both edges of each PWM output
- Support for synchronization to external hardware or other PWM
- Double buffered PWM registers
- Half cycle reload capability
- Support for double switching PWM outputs
- Fault inputs can be assigned to control multiple PWM outputs
- Programmable filters for fault inputs
- Independently programmable PWM output polarity
- Independent top and bottom dead time insertion
- Each complementary pair can operate with its own PWM frequency and dead time values
- All outputs can be programmed to change simultaneously via a FORCE_OUT event
- PWM_X pin can optionally output a third PWM signal from each submodule
- Channels not used for PWM generation can be used for buffered output compare or input capture functions
- External ADC input, taking into account values set in ADC high and low limit registers

eFlexPWM Benefits: Power Conversion

- Independent control of TOP & BOT deadtime control – for high voltage IGBT of half bridge stages the on/off times can differ, so having different deadtime insertions timings for top/bot can ultimately increase electric power efficiency.

- Independent counter for each of 4 submodules (3 PWMs) – each complimentary pair of PWMs generally require to be independent of each other. (control of secondary and primary) Mandatory for SMPS. FTM: all PWMs are synchronised to same 16bit counter, OK for 3 phase motor control and low freq solar inverters.

- GHz resolution is mandatory for switched mode power supplies, lower freq solar inverters could get away without this. Dithering without GHz resolution may introduce on output voltage of SMPS.

- half cycle reload – manage control algorithm more efficiently pre-loading values prior to next edge of PWM, allowing less tasks to be performed on a PWM transition.

- output triggering very flexible and programmable delay capability, mandatory need for SMPS and solar inverters. FTM triggers only on a channel compare and re-init of counter. FTM requires additional PDB to create delayed triggering to ADC modules.

- fault inputs – SMPS require optional/alternative force out state dependent on the individual fault.

ADC Channel Scan Modes

- Once
  - The ADC starts to sample just one time whether you use the START bit or by a sync pulse. This mode must be re-armed by writing to the ADCR1 register again if you want to go capture another scan
- Triggered
  - Sampling begins with every recognized START command or sync pulse
- Loop
  - The ADC continuously take samples as long as power is on and the STOP bit has not been set
- Sequential Mode
  - Sequential will sample SampleN one after another. Channel ANAx are sampled by ADCA and Channel ANBx are sampled by ADCB
- Parallel Mode
  - Simultaneous: Parallel can sample SampleN from Group1 and SampleN from Group 2 at the same time.
  - **Independent: ADCA and ADCB can operate independently. At end of scan of each ADC, they generate separate interrupt request.**

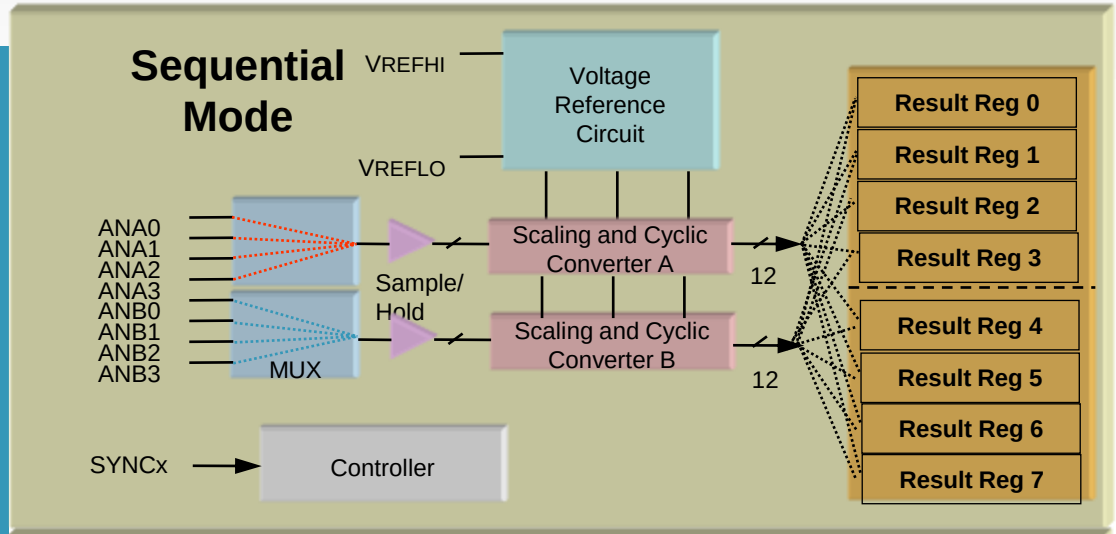

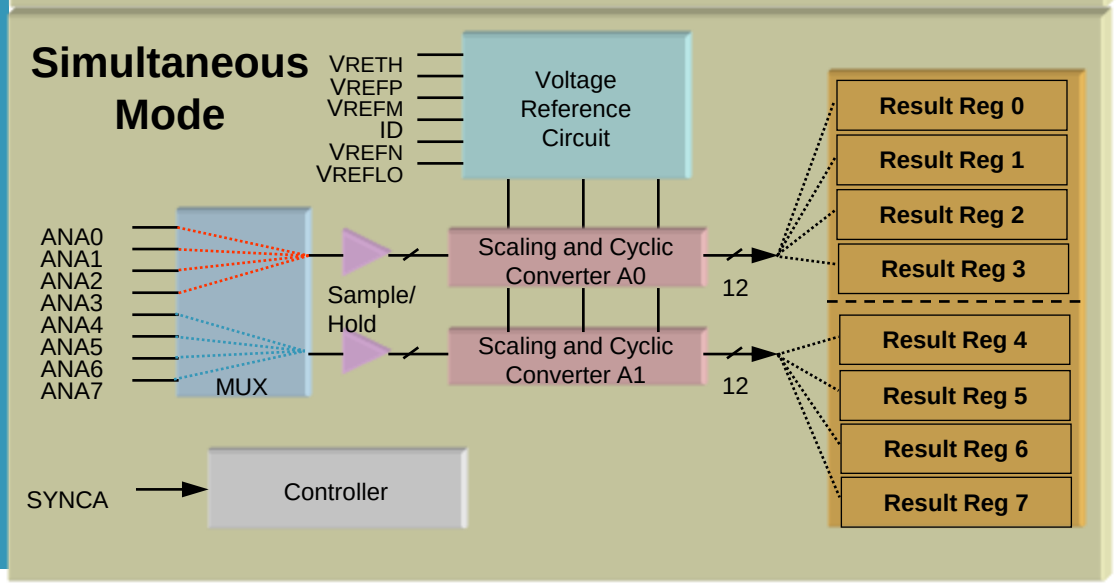

Interconnection

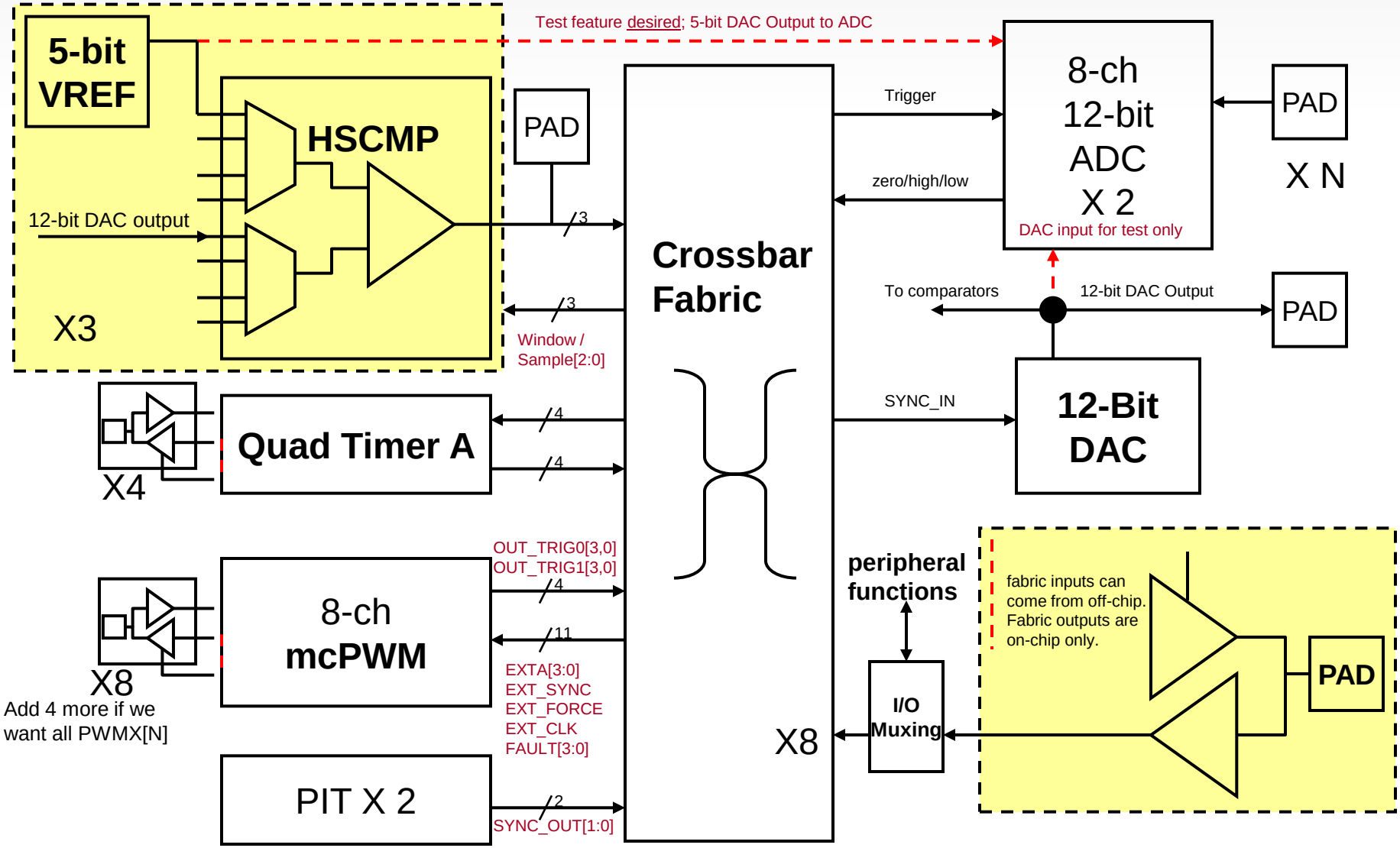

freescale™