KINETIS V SERIES MCUS

3.3V HIGH SPEED, HIGH PERFORMANCE ARM-BASED MCUS

SECURITY AND CONNECTIVITY BU
SR. MCU FAE, STANLEY HUANG
MAY 2017

SECURE CONNECTIONS
FOR A SMARTER WORLD

Agenda

- Kinetis V(KV) MCU Product Family, Block diagram & Key Features
- Motor Control Solutions
- Key Enablement Tools

Kinetis V series MCUs based on ARM® Cortex® cores Target on Motor Control & Digital Power Conversion

Motor Control

- Sensored BLDC / PMSM
  - High Dynamic Control
- Sensored ACIM
- Sensorless FOC
  - PMSM/BLDC
  - High Dynamic Control
  - Low Dynamic Control
- Sensorless ACIM
- Multi-Motor Control

Digital Power Conversion

- Solar Inverters
  - Grid-Tied
  - Non Grid Tied
- Power factor correction
- Switch Mode Power Supplies
  - AC/DC
  - DC/DC
- UPS
  - On-Line
  - Offline
- Inductive cooking
  - Multi cook plate

Motor Control Applications

- Fans
- Pumps
- Blenders
- Compressors
- HVAC
- Washers
- Driers
- Dishwashers
- Air Filters

- Power Tools
- Robotics
- Pick-and-place
- Conveyor Belts
- Factory Automation
- Winders
- CNC Machines
- 3-D Printers
- Servo Drives

- Multi-Motor Control
- Drones/UAV's
- CPAP Pumps





MCU FAMILIES

New Levels of Performance, Reliability and Power Efficiency for Motor Control and Digital Power Conversion

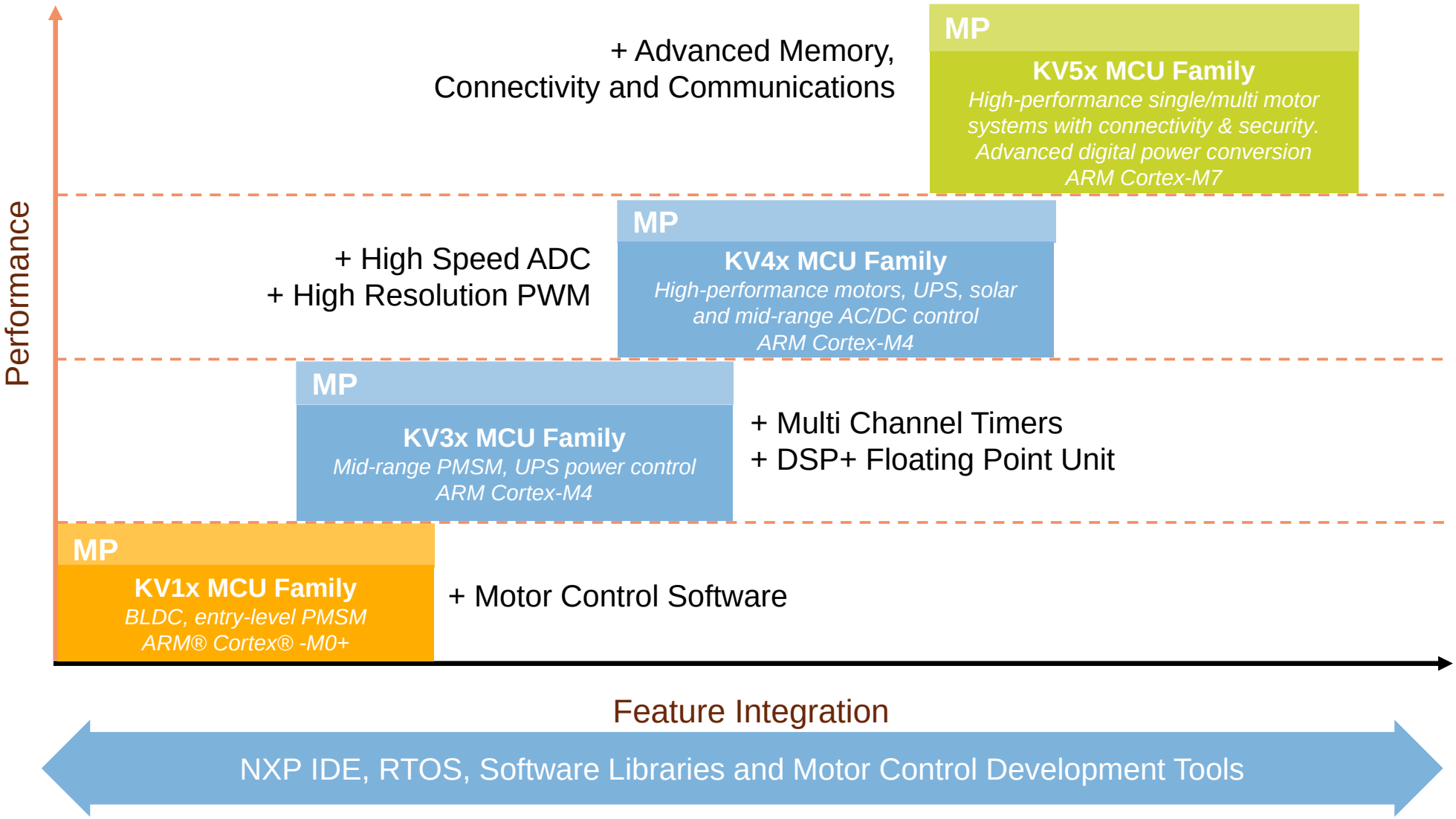

Kinetis V Series: Performance and Feature Scalability

Key Peripherals for Motor and Power Control Applications

MCU Family	Core	Memory	Motor Control Timers: Flextimer	Motor Control Timers: eFlexPWM	ADC	DAC	ACMP	Comms.	Packages
KV5x	240MHz CM7 DSP + FPU	512kB-1MB Flash	2 x 8ch 1x 2ch FlexTimer	2 x 12ch eFlexPWM + Nano-Edge	4 x 12bit 5Msps, 1 x 16bit	1x 12-bit	4x ACMP with 6-bit DAC	Ethernet, 3 x CAN	144 pin 100 pin
KV4x	168MHz CM4 DSP + FPU	64-256kB Flash	2 x 8ch 1x 2ch FlexTimer	12ch eFlexPWM + Nano-Edge	2x 12bit 4.1Msps	2x 12-bit	4x ACMP with 6-bit DAC	2 x CAN	100 pin 64 pin 48 pin
KV3x	100/120MHz CM4 DSP + FPU	64-512kB Flash	2x 8ch 2x 2ch FlexTimer	-	2x 16-bit 1.2Msps	2x 12-bit	2x ACMP with 6-bit DAC	-	100 pin 64 pin 48 pin 32 pin
KV1x	75MHz CM0+ H/W DIV & SQRT	16-128kB Flash	2x 6ch 2x 2ch FlexTimer	-	2x 16-bit 1.2Msps	1x 12-bit	2x ACMP with 6-bit DAC	1 x CAN 2.0B ctrl	64 pin 48 pin 32 pin

Scalable performance, timing and analog functionality based on application need

Common Peripherals = Unique Peripherals

Kinetis V – MCU by Motor Type

KV1x	KV3x	KV4x	KV5x
		Power Control: UPS, SMPS, Photo Voltaic	
	FOC ACIM		Up to 2 x FOC ACIM
1 PMSM Motor		Up to 2 x PMSM Motors	Up to 4 x PMSM Motors
Low Dynamic PMSM FOC	High Dynamic PMSM FOC		
1 or 2 BLDC Motors		Up to 4 x BLDC Motors	Up to 8 x BLDC Motors
BLDC Motors – FOC; Sensorless & Sensor'd			
Industrial Real Time Control			

Kinetis V Series KV1x: Block Diagram

Core/System
•75MHz Cortex-M0+ with Hardware Divide & Square Root
• 4ch DMA

Memory
•16/32/64/128KB Flash
•8/16KB SRAM
•Option with FAC (Flash access control)

Communications
•Multiple serial ports **+ 1 FlexCAN***

Analog
•2 x 8ch 16-bit ADC
  •1.2Msps in 12-bit mode (835ns)
•1 x12-bit DAC
•2 x ACMP with 6-bit DAC

Timers
•Up to 2x6ch FlexTimer (PWM) *
•Up to 4x2ch FlexTimer (PWM/Quad Dec.)
•Low Power Timer

Other
•32-bit CRC
•Up to 54 GPIO
•1.71V-3.6V; -40 to 105C

Packages
•32QFN, *32LQFP, 48LQFP, **64LQFP**
* Package Your Way

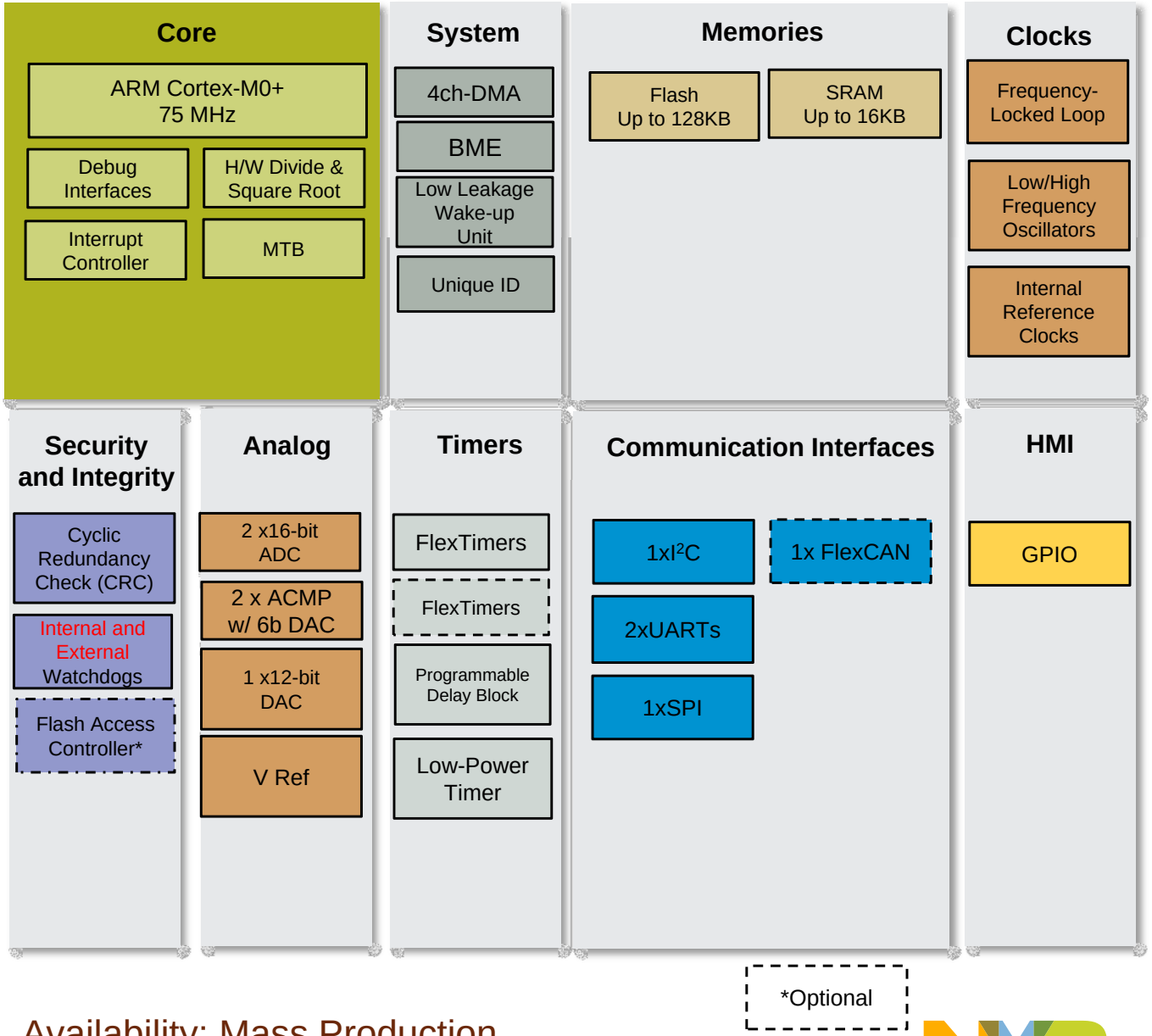

Availability: Mass Production

Cortex M7– Replacement for MCU+DSP

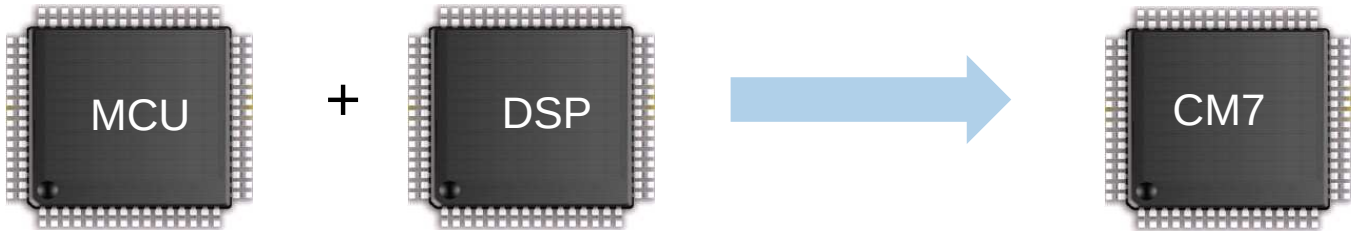

- **Trends:**
  - Convergence of MCU+DSP to DSC for cost reduction
  - Increased processing demands
  - Increasing consumer expectation of quality in portable devices
- **Example applications:**
  - Multi-channel audio
  - Dolby Digital in consumer devices
  - Advanced Motor Control
  - Factory Automation
  - Automotive
  - Image processing

CM7 Advantage:

- High performance core with fast DSP
- Compatibility with existing Cortex-M4 designs
- Flexible memory system

Kinetis V Series KV3x: Block Diagram

Core/System
- Cortex-M4 @ 100/120MHz with FPU
- 4 or 16ch DMA

Memory
- 64/128/256/512KB Flash,
- 16/24/48/96KB SRAM
- FlexBus (512KB version only)
- Bootloader

Communications
- Multiple serial ports

Analog
- 2 x16-bit ADC: 1.2Msps in 12-bit mode
- Up to 2 x12-bit DAC
- 2 x ACMP with 6-bit DAC

Timers
- Up to 2x8ch FTM (PWM)
- 2x2ch FTM (PWM/Quad Dec.)
- Programmable Delay Block
- Low Power Timer

Other
- Up to 70 I/Os
- 6 high-drive I/Os (20mA) – SPI/I2C
- 1.71V-3.6V; -40 to 105C

Packages
- 32QFN, *48LQFP, 64/100LQFP
- *Alternative, non committed package

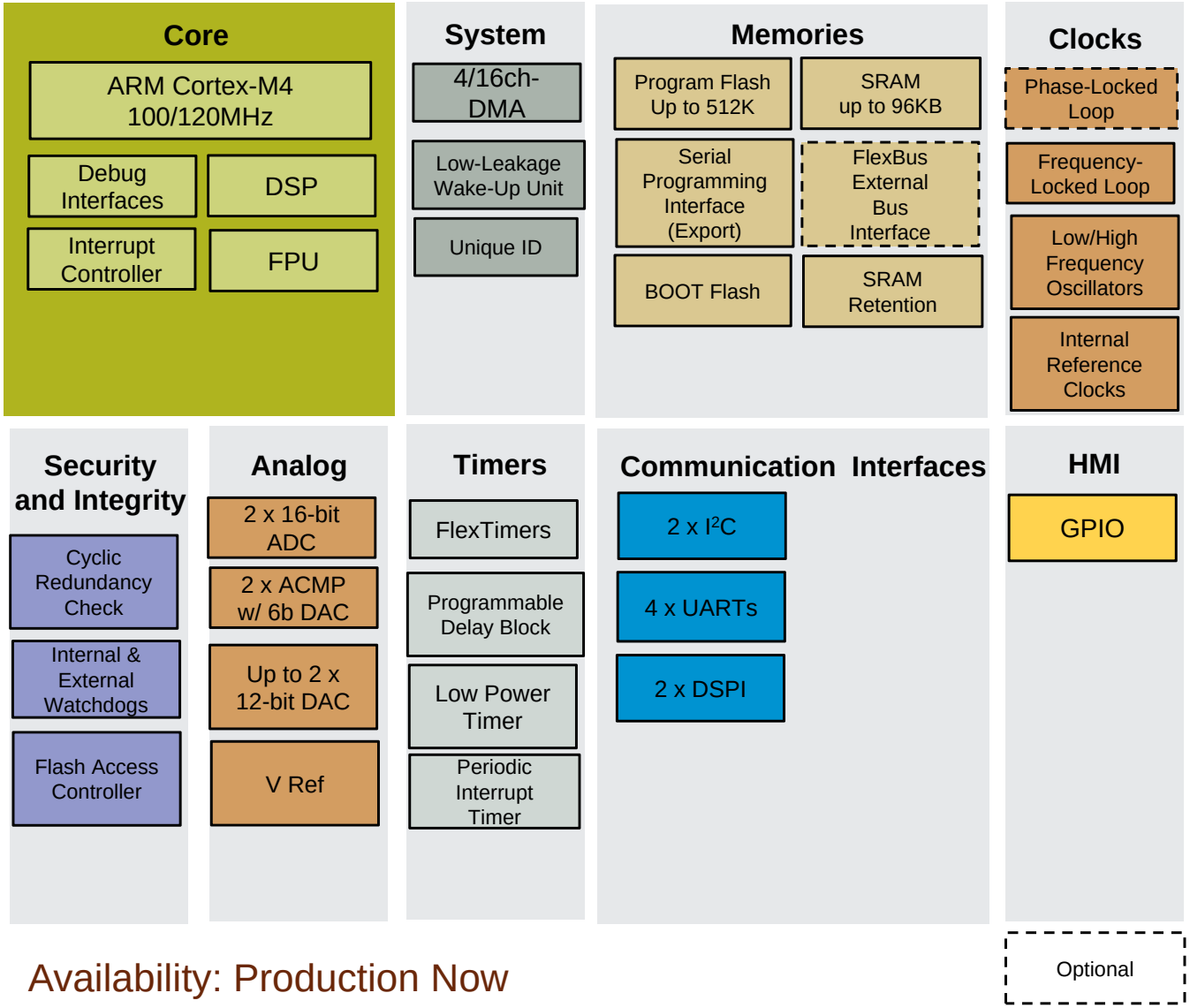

Availability: Production Now

Kinetis V Series KV4x: Block Diagram

Core/System
•168MHz Cortex-M4, FPU

Memory
•64/128/256KB Flash @ 128bits wide w/ 128Byte cache
•16/24/32KB SRAM
•Bootloader

Communications
•Multiple serial ports
•Up to 2 x CAN

Analog
•2 x 8ch 12-bit ADC
  •Sampling at up to 4.1MS/s
  •PGA x1, x2, x4
•12-bit DAC
•4 x ACMP with 6-bit DAC

Timers
•Up to 12ch eFlexPWM
  •Up to 312ps PWM and PFM Resolution
•2x8ch + 1x2ch FlexTimer (PWM)
•Quadrature Encoder
•2 x Programmable Delay Blocks

Other
•32-bit CRC
•Inter-Peripheral Crossbar with AND/OR interface
•Up to 56 I/Os
•1.71V-3.6V; -40 to 105oC

Packages
•*48LQFP, 64 LQFP & 100LQFP
•*Alternative, non committed package

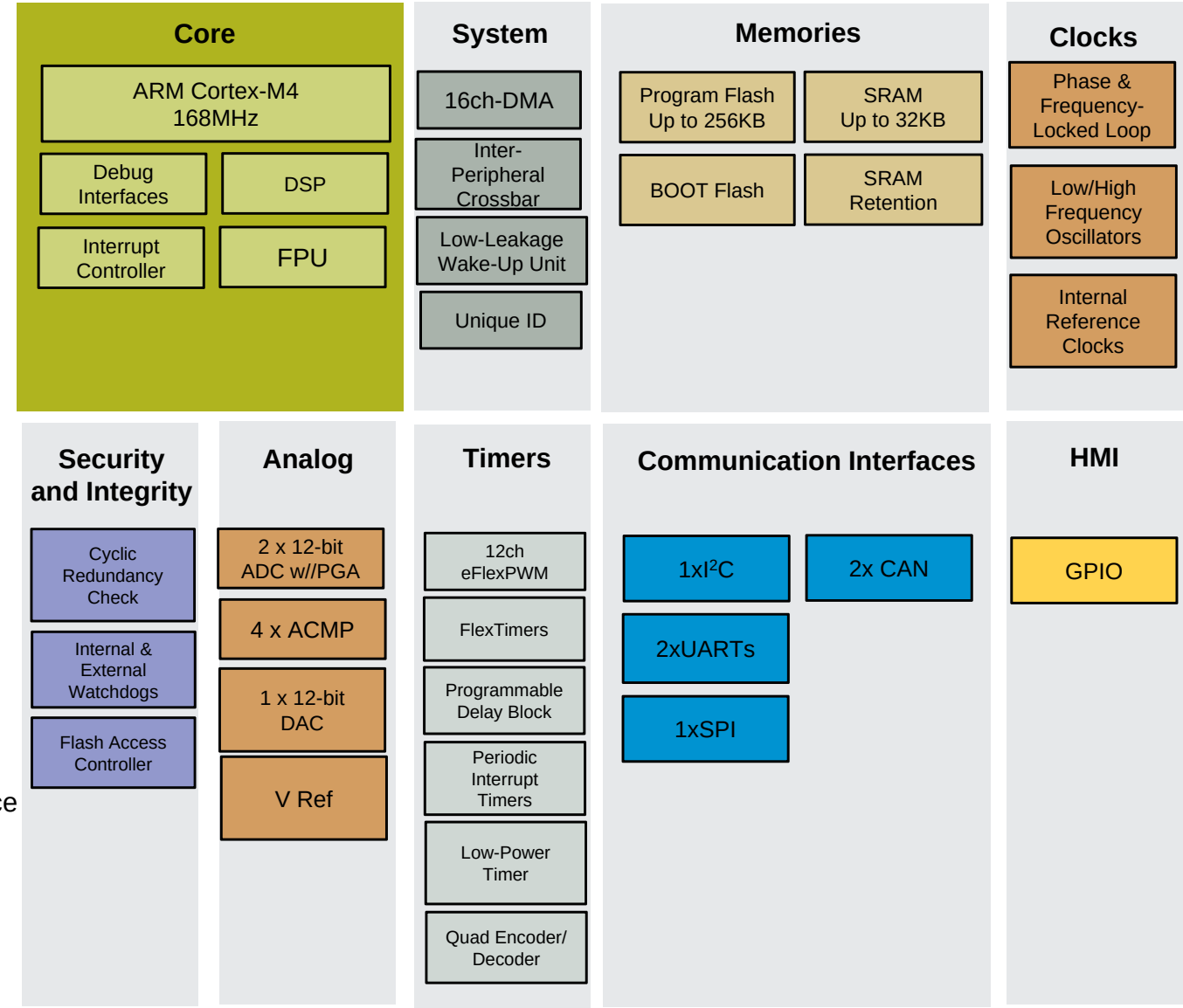

Availability: Production Now

Kinetis KV5x MCU Family

Key Features:

Core/System

- Upto 220MHz Cortex-M7 with FPU and 32ch DMA
- 16KB Instruction Cache / 8KB Data Cache

Memory

- 512KB/1MB Flash, 256bits wide, 128 Bytes cache
- 128/256KB SRAM
- Boot Flash

Communications

- Multiple serial ports
- 3 x FlexCAN

Analog

- 4 x 8ch 12-bit ADC
  - 5Msps Sample Time
- 1 x 16-bit SAR ADC
- 1 x12-bit DAC
- 4 x ACMP w/ 6b DAC

Timers

- 1 x 12ch eFlexPWM
  - 312ps PWM and PFM Resolution
- 1 x 12ch eFlexPWM
- 2x8ch FlexTimer (PWM)
- 2x2ch FlexTimer (PWM)
- Quadrature Encoder
- 2 x Programmable Delay Blocks
- Low-Power Timer

Others

- MMCAU & RNG
- 32-bit CRC
- Inter-module Crossbar Switch with AOI
- Memory Protection Unit
- 1.71V-3.6V; -40 to 105oC

Packages

- 100LQFP, 144LQFP, 144MAPBGA
- V Temp (105C) : 220MHz

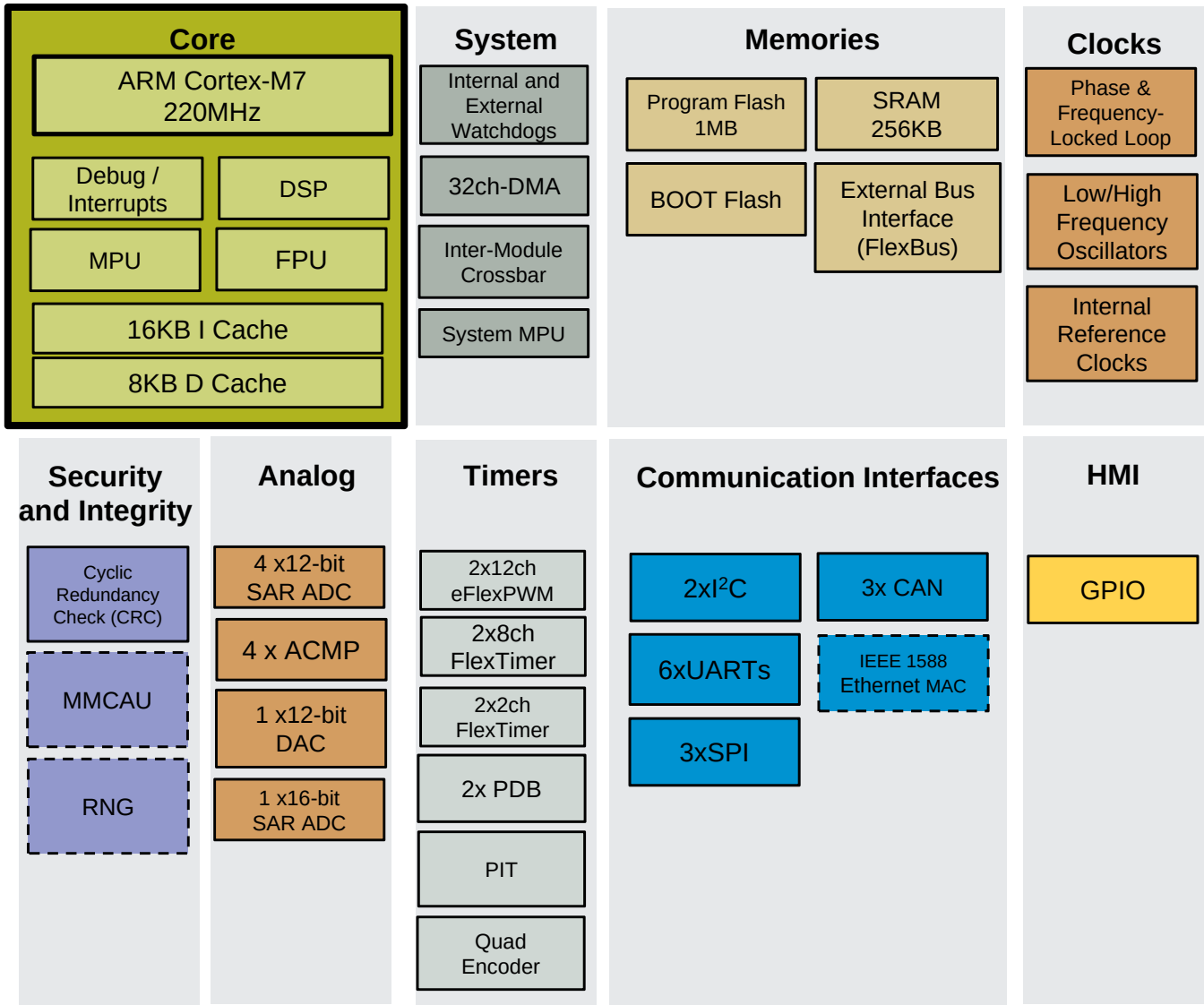

Key Features

Cortex-M0+: What's the "+" standing for?

- **Extended system-level capabilities**
  - Single-cycle fast I/O access port facilitates bit-banging and software protocol emulation, keeping an 8-bit 'look and feel'
    - Up to 50% faster than normal I/O
    - Rapid GPIO controller (FGPIO) have SET/CLEAR/TOGGLE control for all pins in zero wait states
    - Fast application response by Bit Manipulation Engine (BME)

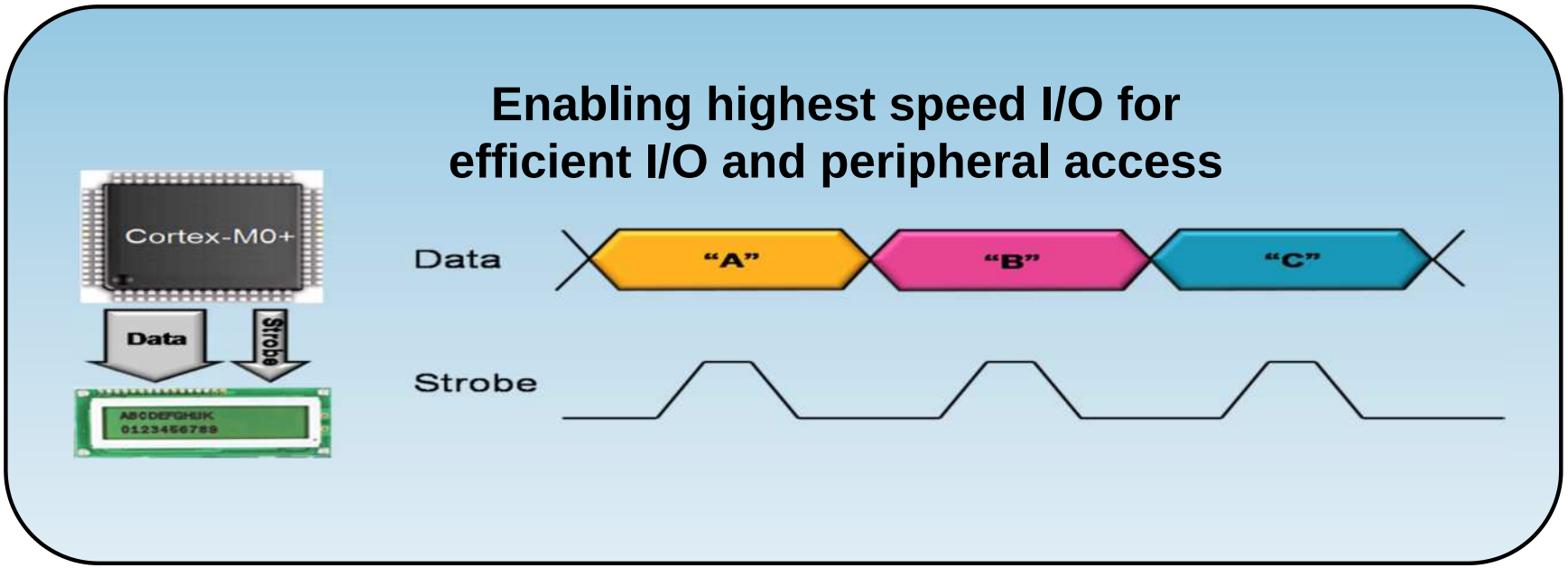

Bit Manipulation Engine(BME)

- The BME provides hardware support for atomic read-modify-write memory operations to the peripheral address space in Cortex-M0+.
  - Decorated Stores
    - AND, OR, XOR and Bit field insert (BFI)
  - Decorated Loads
    - Load and clear one bit (LAC1), Load and Set one bit (LAS1), Unsigned bit field extract (UBFX)

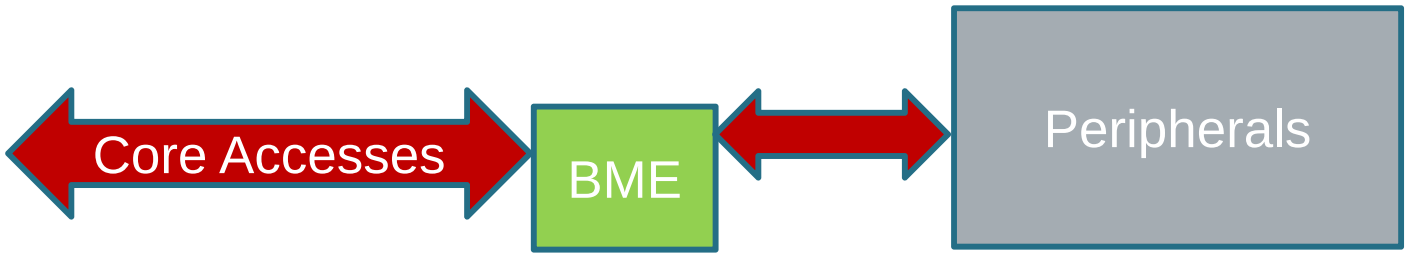

Bit Manipulation Engine (BME)

- Cortex-M0/M0+ does NOT support bit manipulation at all.
- NXP created bit manipulation(AND,OR,XOR and Bit field insert (BFI)) support.
- Platform hardware support for uninterruptible atomic read-modify-write memory operations to the peripheral address space in Cortex-M0+ based microcontrollers.
- Reduced overall code size and improved bits operation speed as well system response speed.

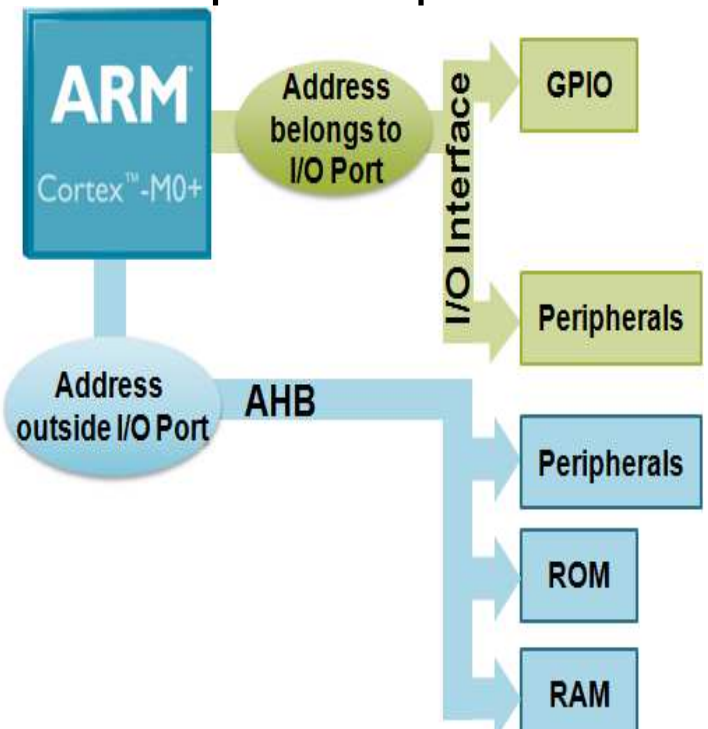

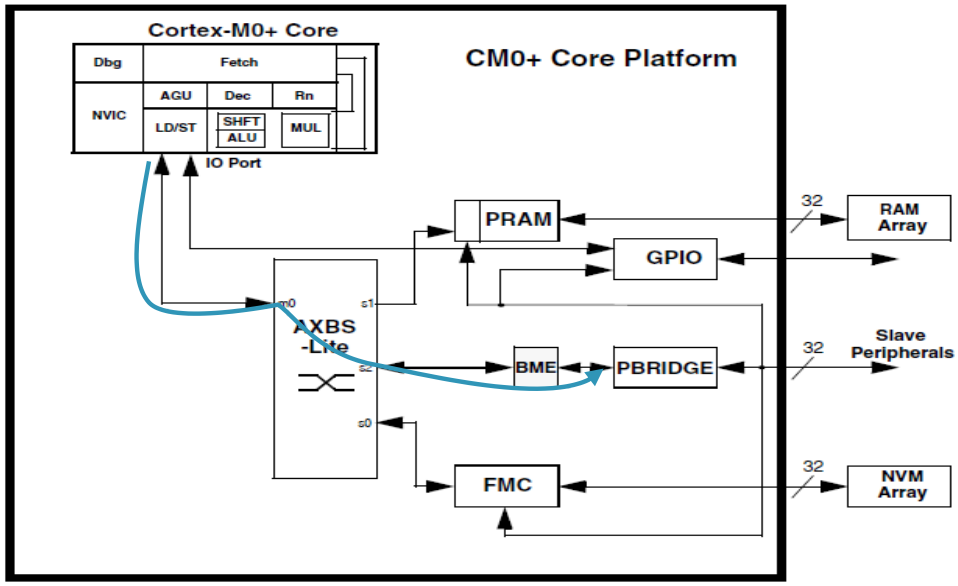

Note: BME can be accessed only by the core.

Memory-Mapped Divide and Square Root (MMDVSQ)

- ARM's Cortex-M0+ core does NOT support integer divide & square root instructions. Requires software emulation via a software library function.

- KVxx MCU includes a lightweight, memory-mapped divide & square root coprocessor (MMDVSQ)
  - Supports 32/32 signed and unsigned divide (or remainder) calculations
  - Supports 32-bit unsigned square root calculations

- MMDVSQ noticeably reduce the fast control loop execution time. Additionally, each iteration of the fast control loop includes 3 integer divisions and 1 SQRT calculation.

```
Memory-Mapped Programming Model
 Four 32-bit data registers
    DEND = dividend
    DSOR = divisor
    RCND = radicand
    RES  = result
 +
    CSR  = control/status
```

Analog-to-Digital Converter (ADC)

- Successive Approximation (SAR) ADC.
- High sampling rate and high resolution than competitors.
- Additionally, We have :
  - Hardware averaging by 1, 4, 8, 16, or 32. (Set AVGS bits)
  - Self-calibration mode
  - Automatic Compare Function(less-than, greater-than or equal-to, within range, or out-of-range)
  - Triggering synchronization w/DAC
  - Internal temperature sensor
  - DMA trigger

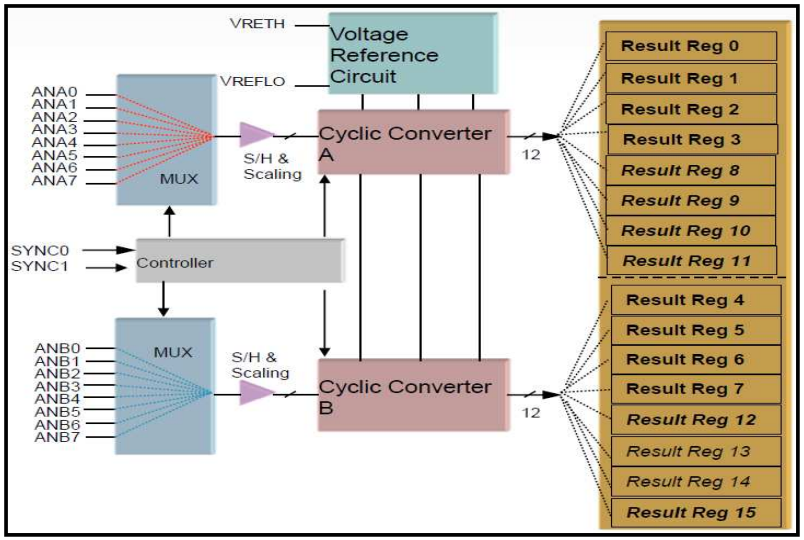

ADC Self-calibration Mode

- One-time calibration must be done to generate the offset and gain compensation values in the start.

- These values are automatically subtracted (offset, ADCOFS registers) and multiplied (gain) during the conversion sequence to compensate for internal errors.

ADC Compare Modes

- Inside and Outside range capabilities allow applications to do comparator functions without the need for added hardware
- Continuous conversions can be used so that the ADC will not interrupt until the compare condition is met

ACFGT	ACREN	ADCCV1 relative to ADCCV2	Function	Compare Mode Description
0	0	-	Less than threshold	Compare true if the result is less than the ADCCV1 registers.
1	0	-	Greater than or equal to threshold	Compare true if the result is greater than or equal to ADCCV1 registers.
0	1	Less than or equal	Outside range, not inclusive	Compare true if the result is less than ADCCV1 **Or** the result is Greater than ADCCV2
0	1	Greater than	Inside range, not inclusive	Compare true if the result is less than ADCCV1 **And** the result is greater than ADCCV2
1	1	Less Than or equal	Inside range, inclusive	Compare true if the result is greater than or equal to ADCCV1 **And** the result is less than or equal to ADCCV2
1	1	Greater than	Outside range, inclusive	Compare true if the result is greater than or equal to ADCCV1 **Or** the result is less than or equal to ADCCV2

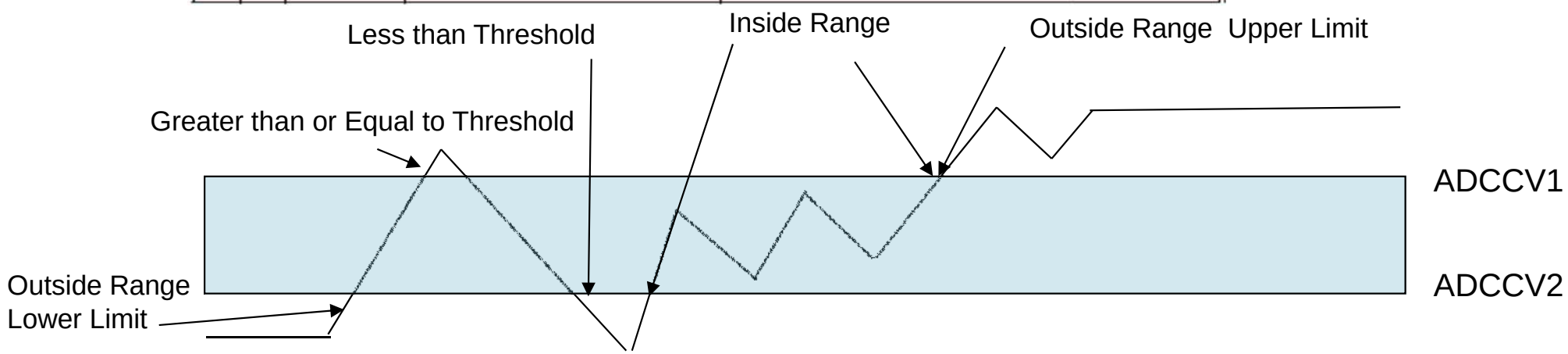

FlexTimer is used to generate different PWM modes.

Such as edge/center align PWM, dead time insert, Trig ADC…

We also use to Measure Speed/Position.

- The FlexTimer can be used for Speed/Position Measurement
- Quadrature Mode
  - The FTM is capable to decode signals from quadrature encoder
  - There are input filters for both A and B inputs

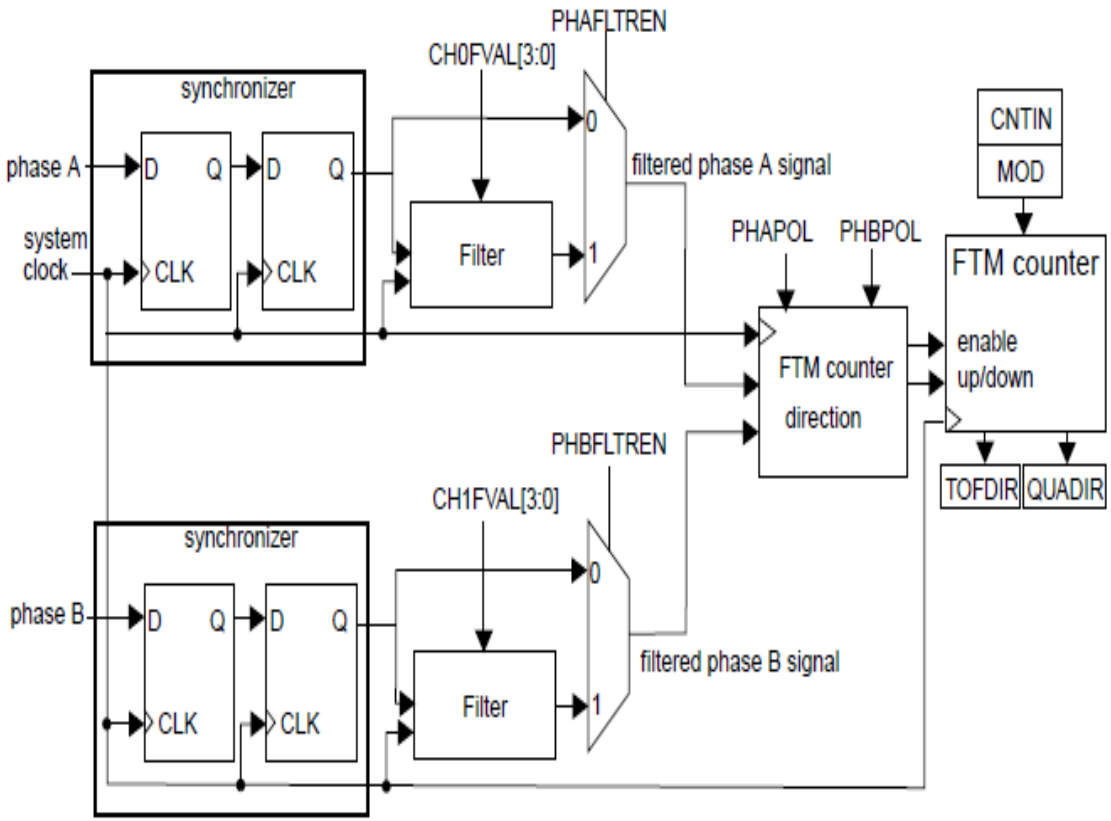

- Pulse width modulation (PWM) is a basic technique for average control of voltage/current in many applications like motor control, switched mode power supplies, lighting, wireless charging, audio amplifiers, and many others.
- This technique represents efficient method to convert one level of voltage/current to another level.

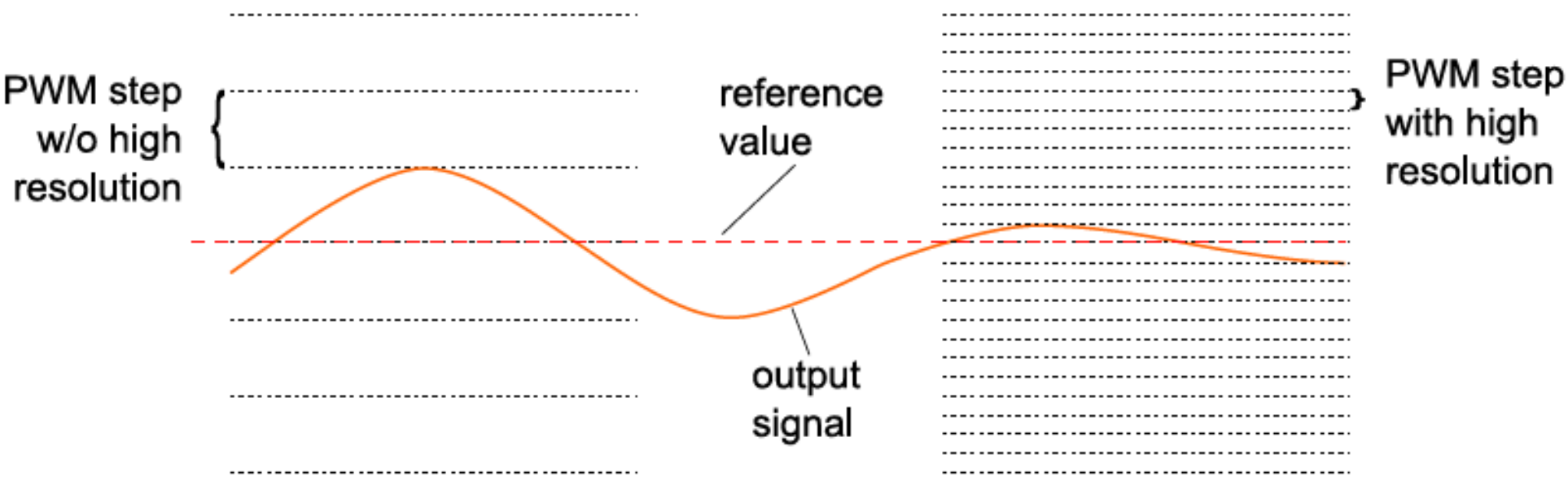

Figure 2. Impact of PWM resolution on output signal

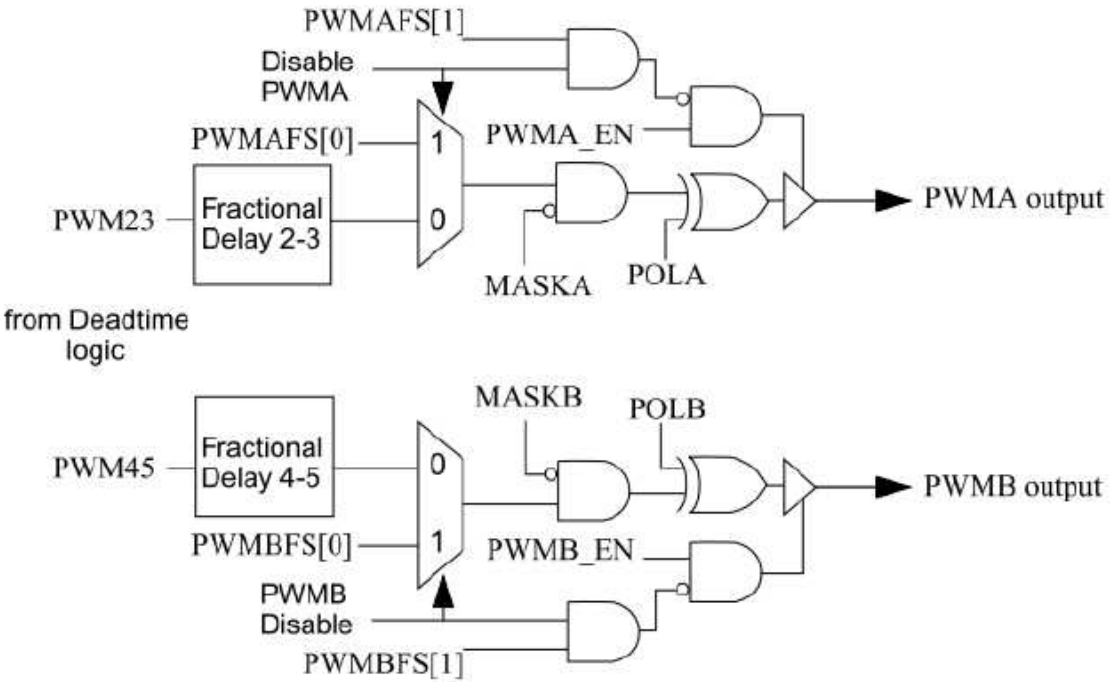

Figure 3. Fractional delay block in eFlexPWM module

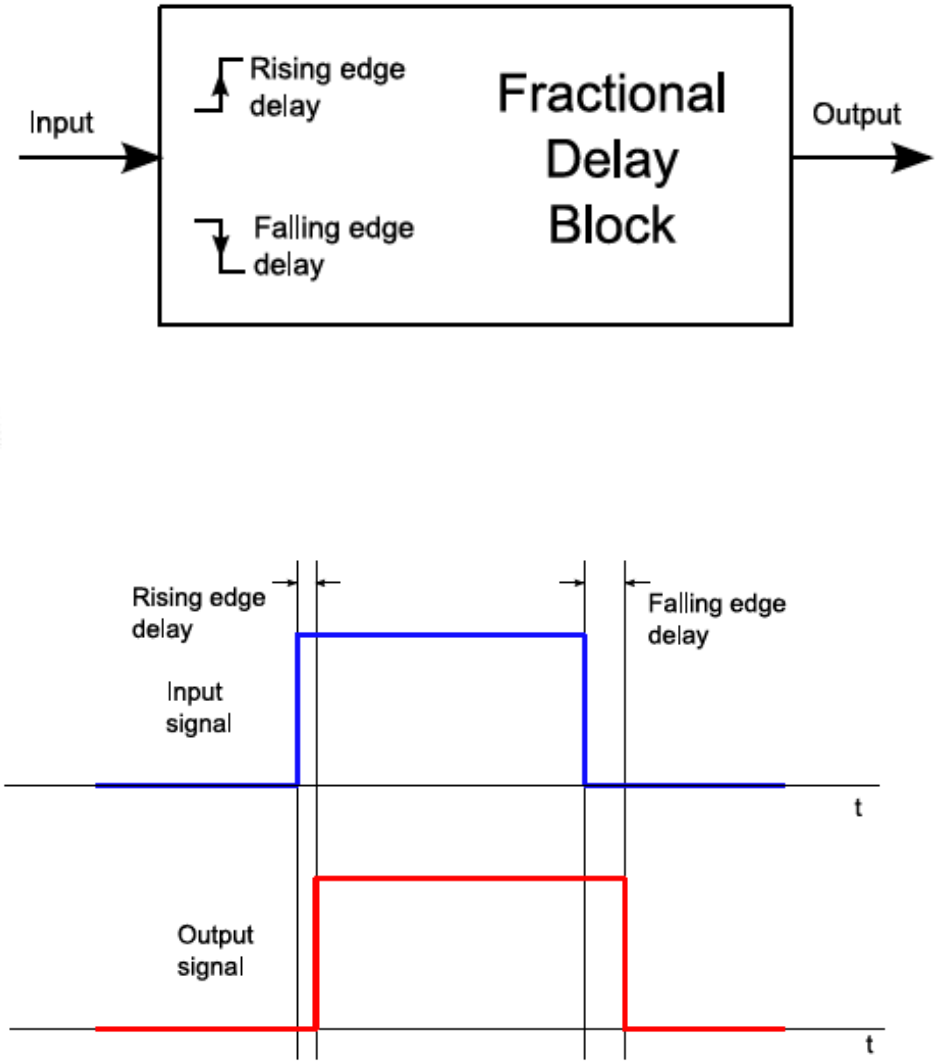

Figure 4. Operating principle of fractional delay block

U.S. Patent # 7288977: High resolution pulse width modulator

ie. Original PWM 16bit resolution + 5bits in the output stage, to become 21bit resolution

- wer.

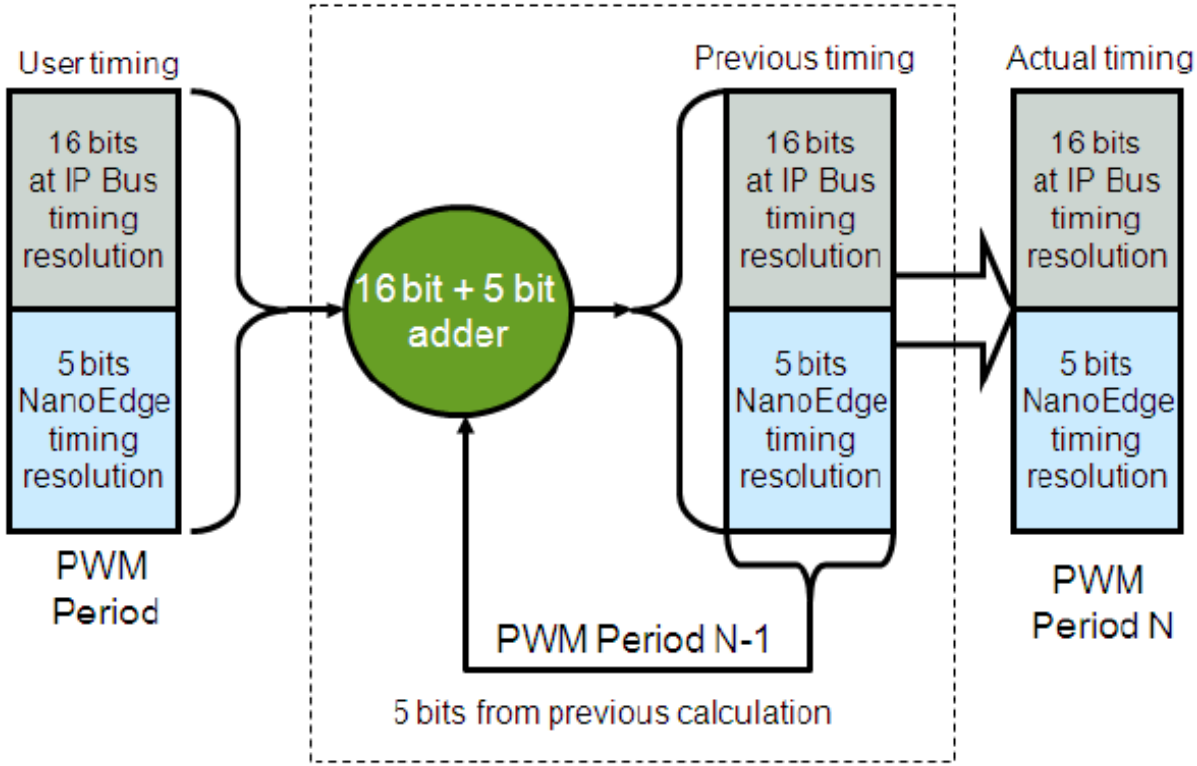

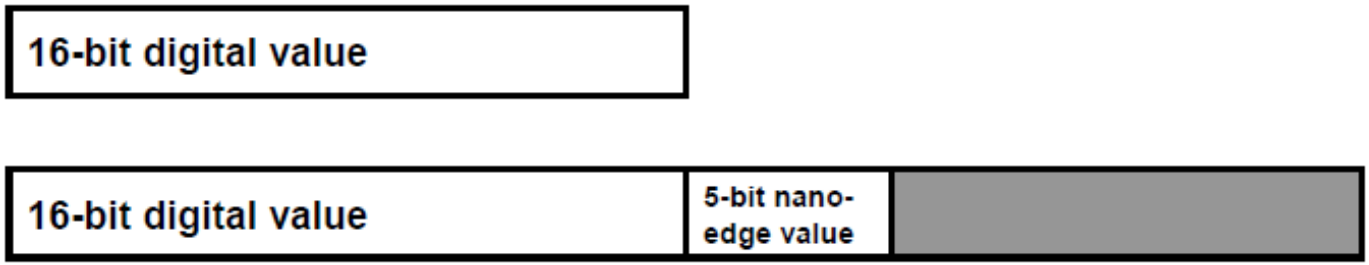

Enhanced Direct Memory Access (eDMA)

eDMA controller:
A 2nd-generation DMA performing complex data transfers.

The DMA hardware includes:
- Source- and destination-address calculations
- Data-movement operations
- Local memory, transfer-control descriptor(TCD)

, containing transfer control descriptors for each DMA channels

eDMA system block diagram

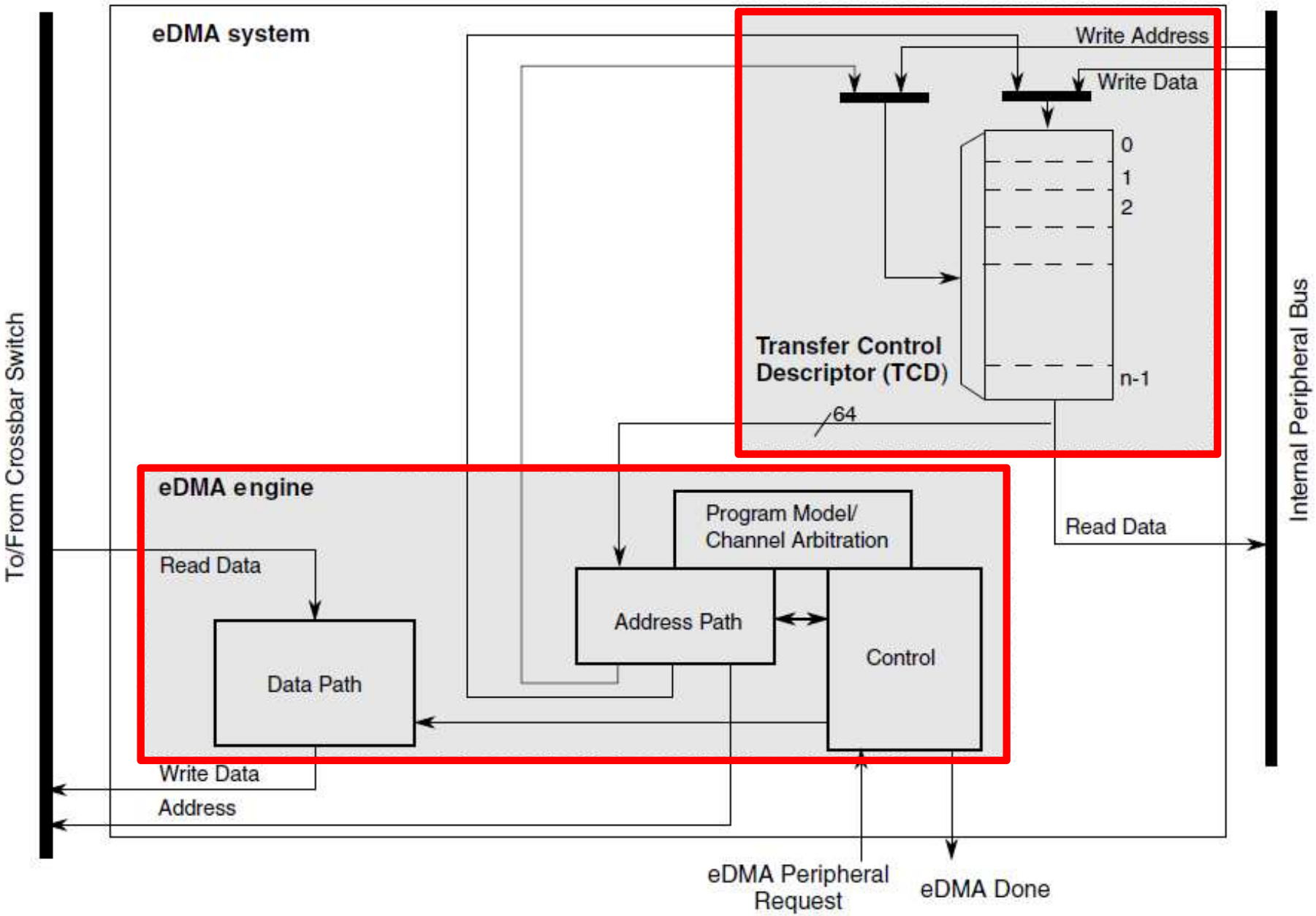

eDMA interconnect diagram

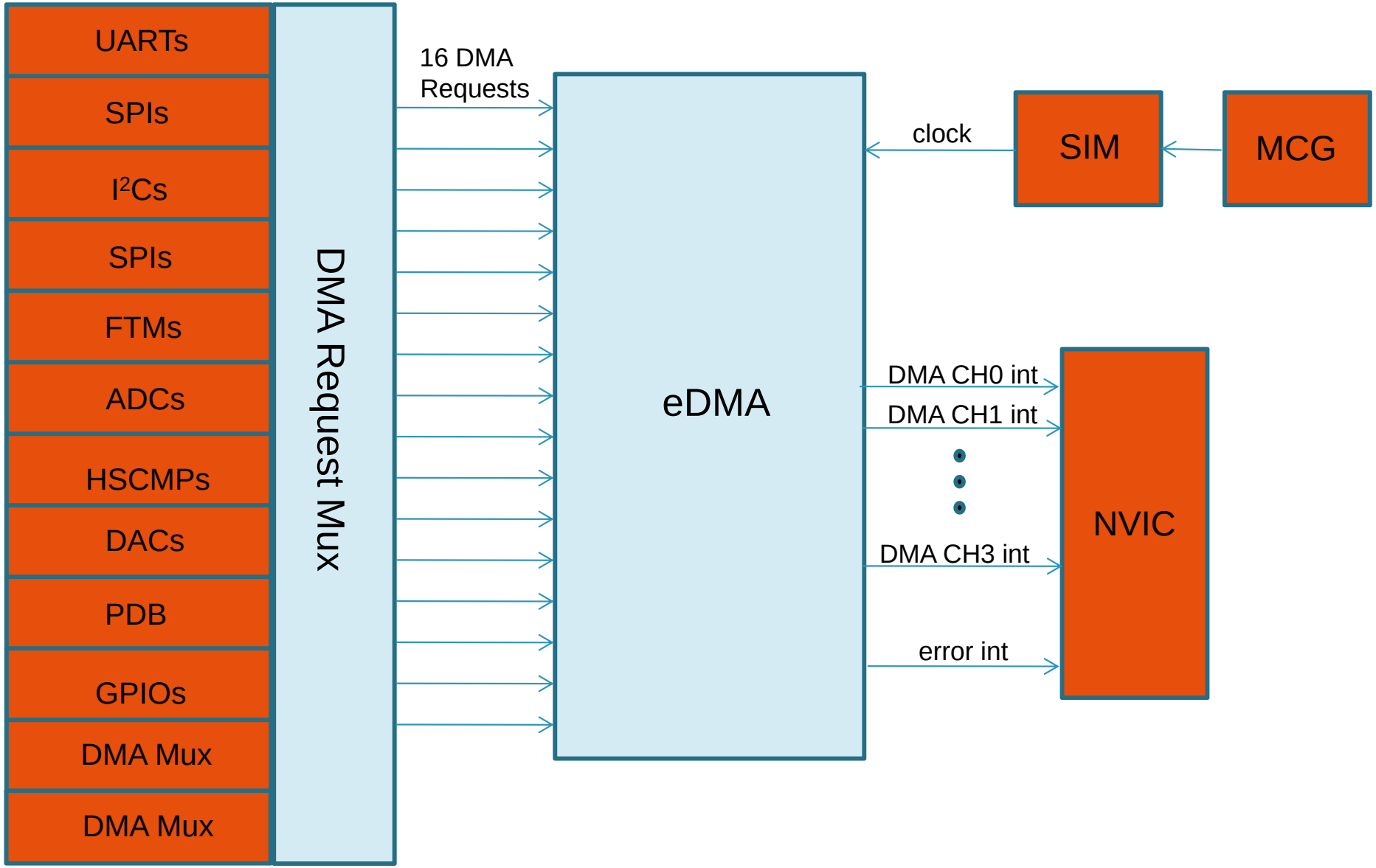

DMA: Nested Loop Example

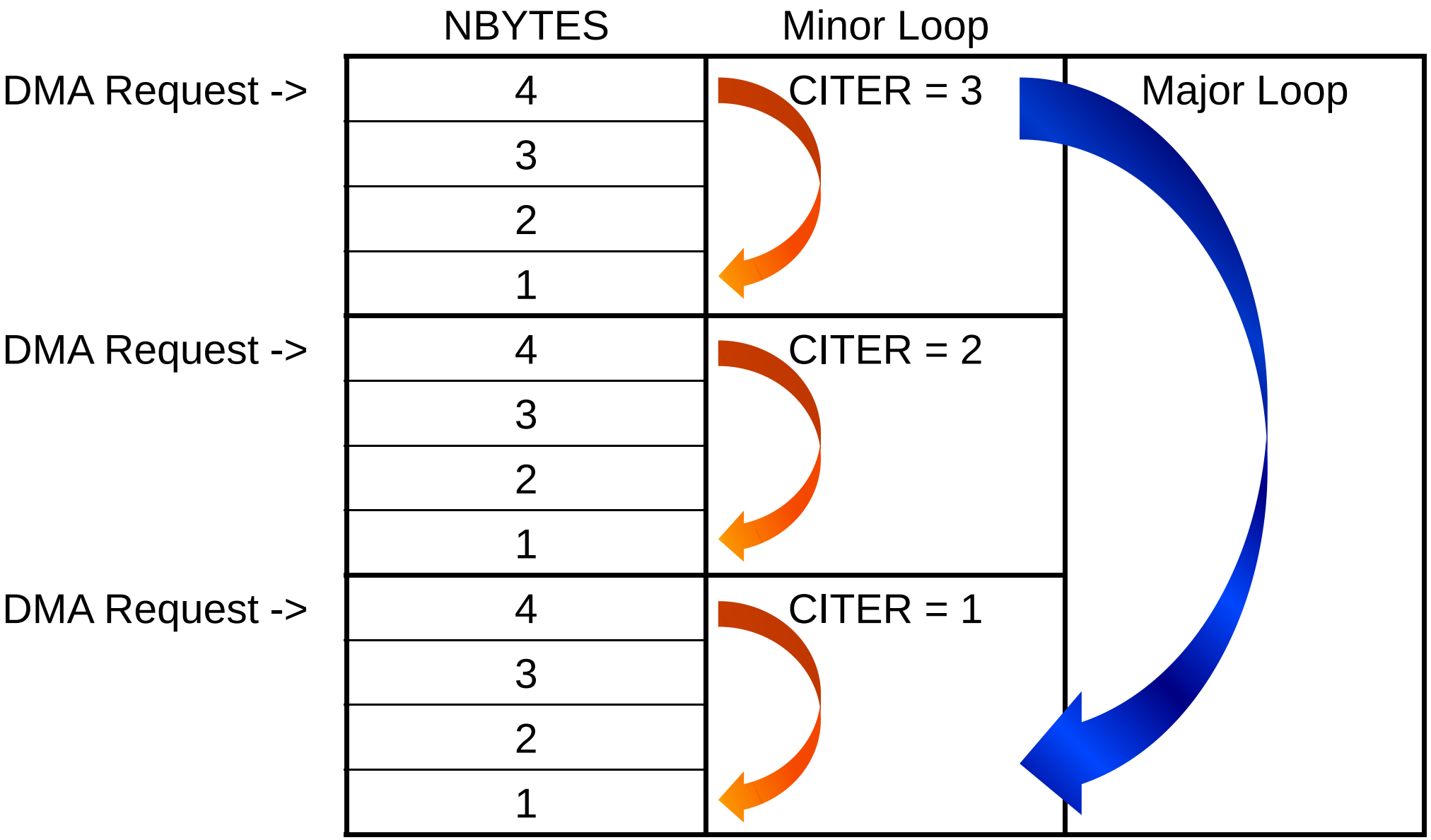

DMA Channel Linking

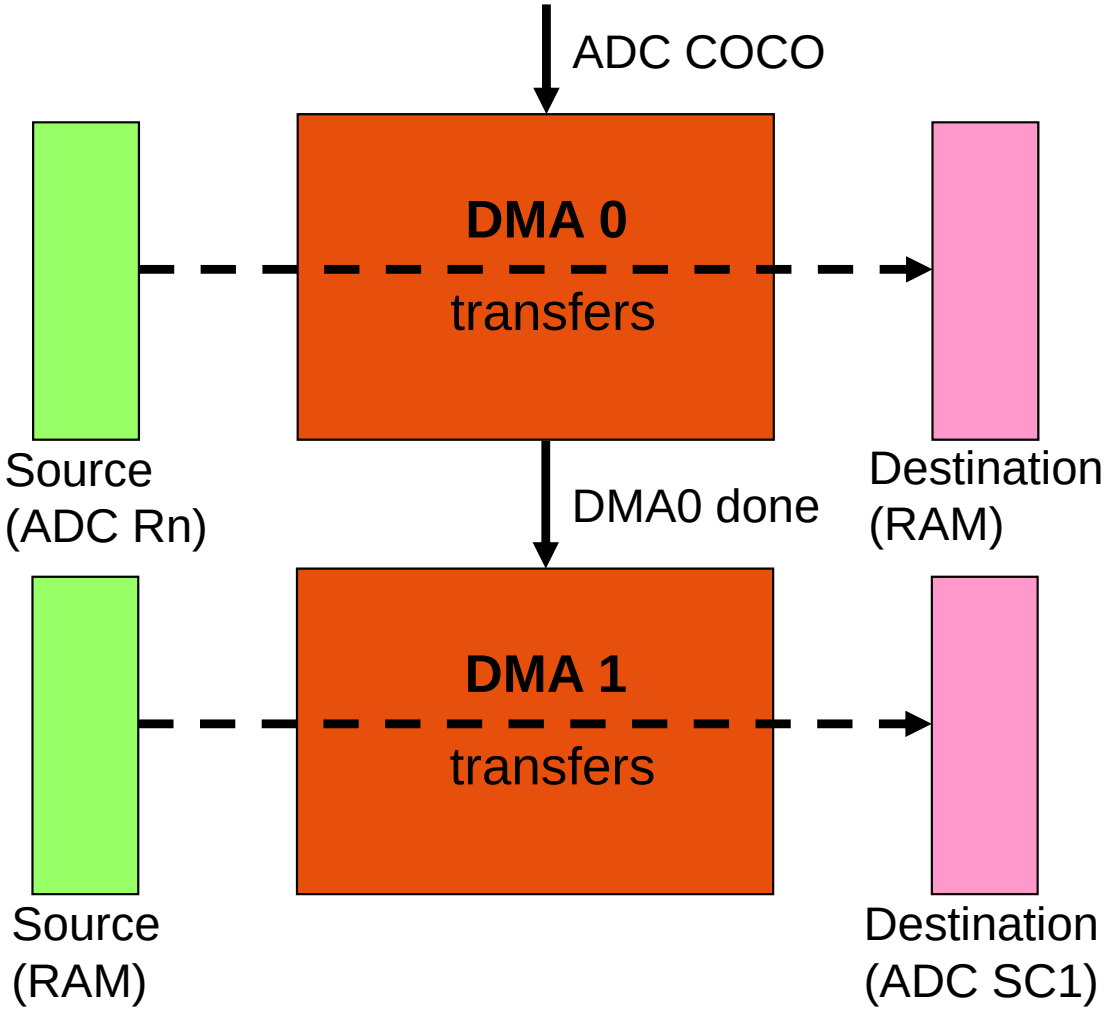

Automatic scan for 16-bit SAR ADC

DMA: Minor Loop Channel Linking Example

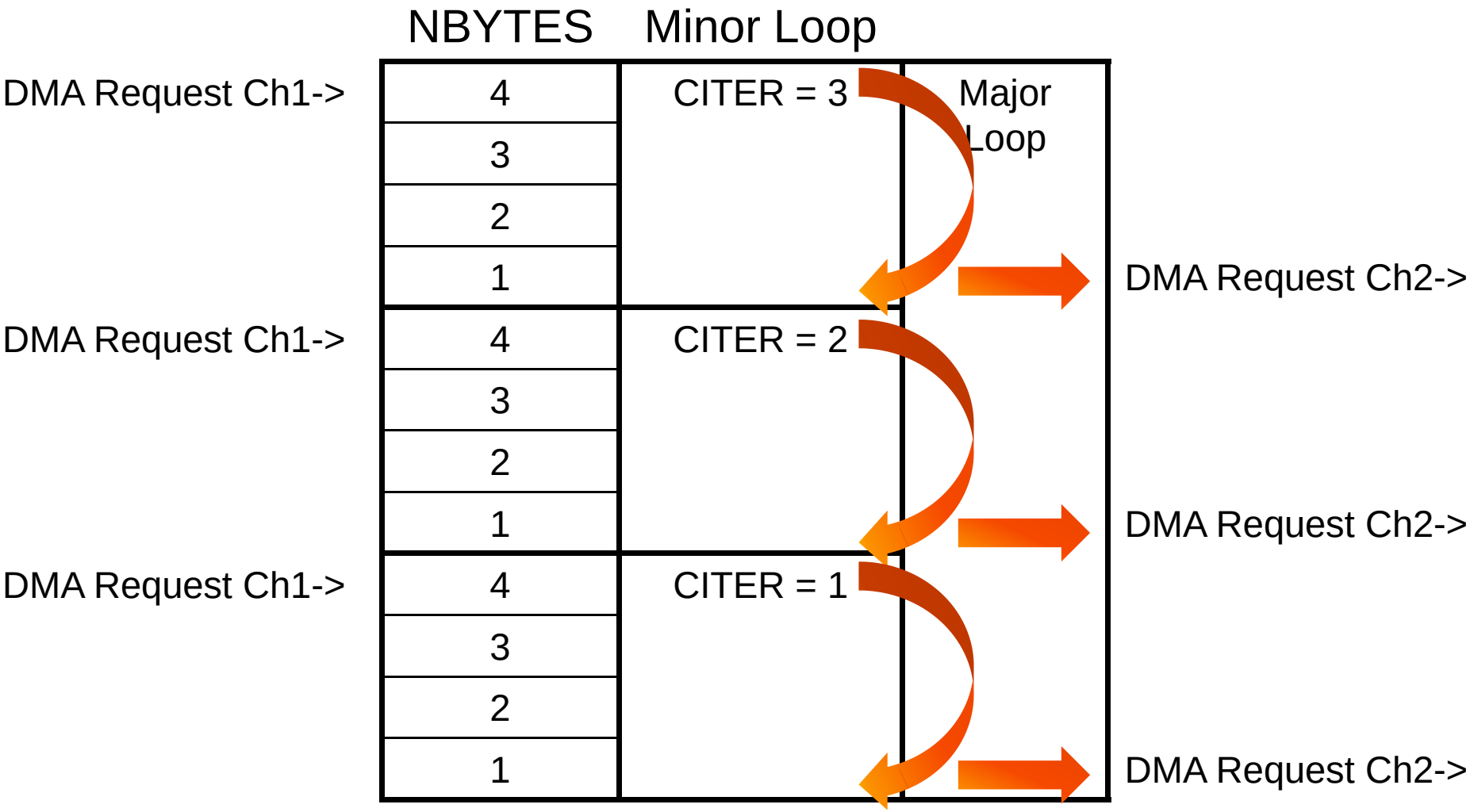

DMA: Major Loop Channel Linking Example

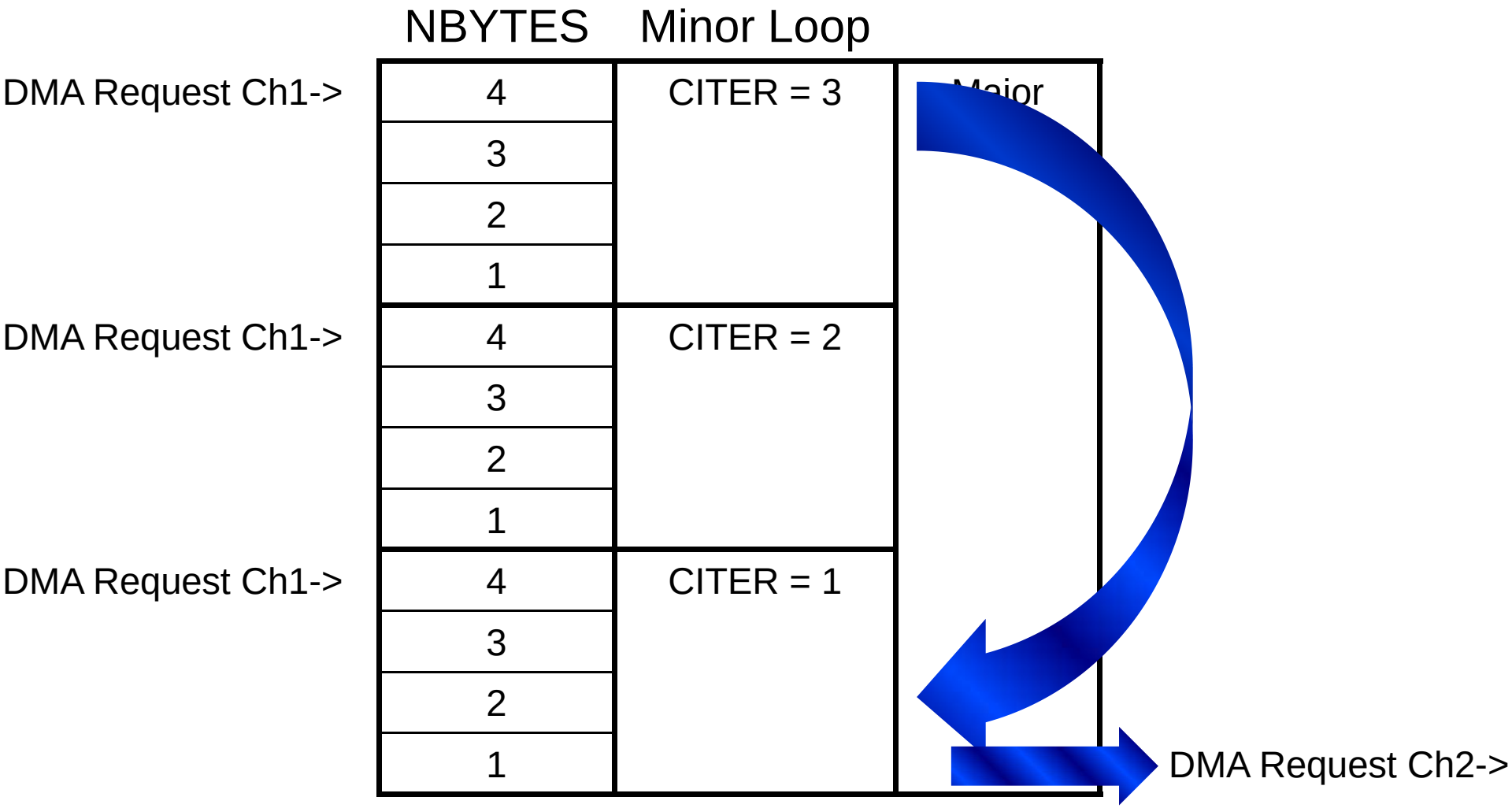

V.D.E. Approved IEC60730 Class B safety s/w routines from Freescale

Kinetis

DSC56F8xxxx

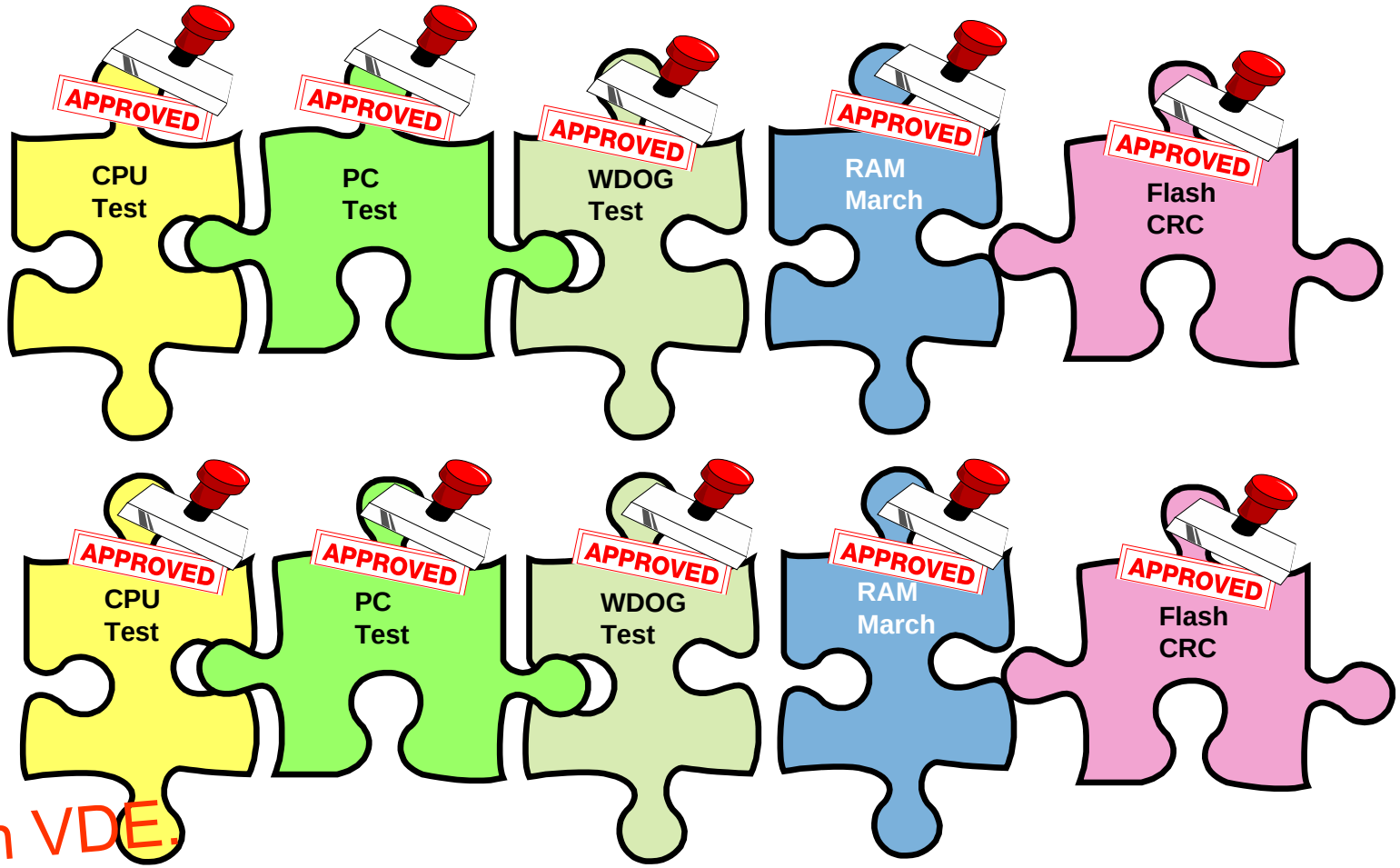

Approved from VDE.

“”””“All pieces have been certified by VDE to help accelerate manufacturer development of Automatic Control”””””

KV MOTOR DEMONSTRATIONS

Kinetis V Series: KV5x Quadcopter Demo

New FSL ESC Module (KV5x MCU & GD3000 Motor Driver IC)

- **1x KV5x MCU** driving all 4 motors using 6-step BLDC open loop control algorithm

  Replaces 4x 8-bit MCUs!!
- KV4x (Cortex-M4) design also available

- **4x MC34GD3000 motor pre-drivers** - existing MC34937A in 56QFN, 8x8mm **Replaces 24 transistors**!!

- KV5x ESC design could be expanded to include
  - FOC algorithm…for quieter motor operation e.g. filming applications
  - 'NAZA' Flight Stability Controller using FSL GYRO

AN4935-- PMSM Sensorless FOC for a Fan Using the Kinetis KV10

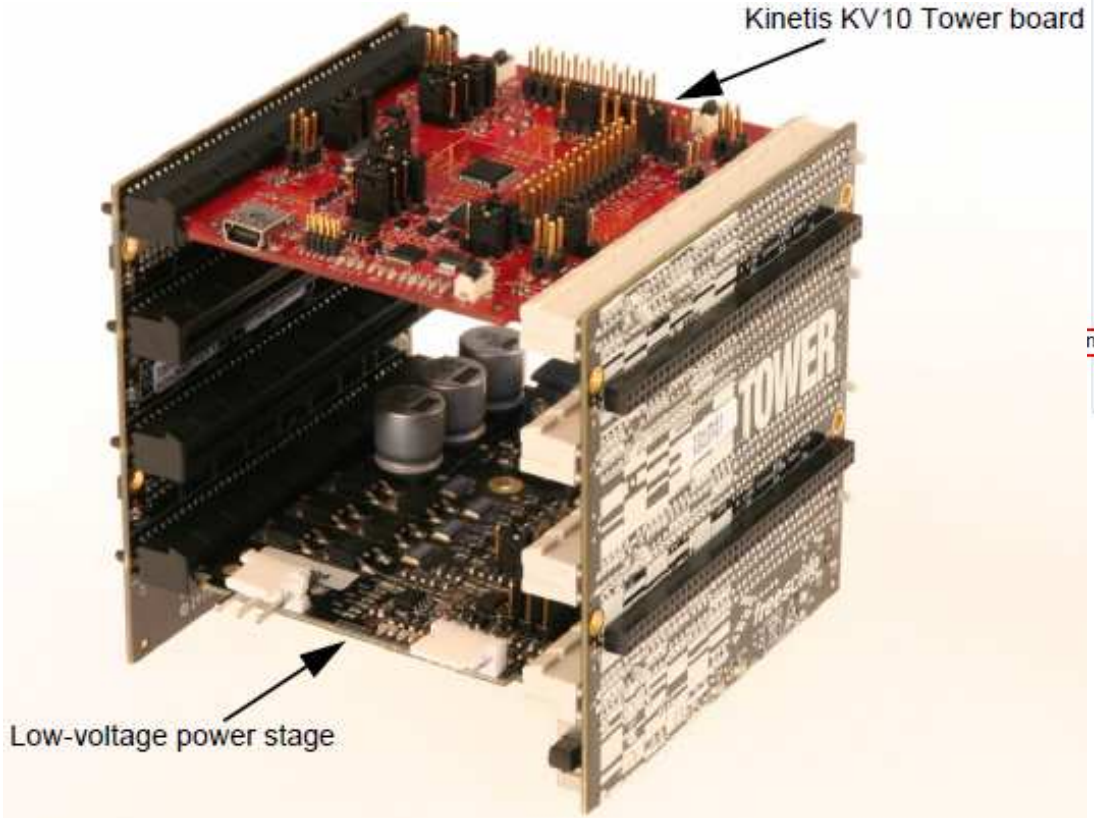

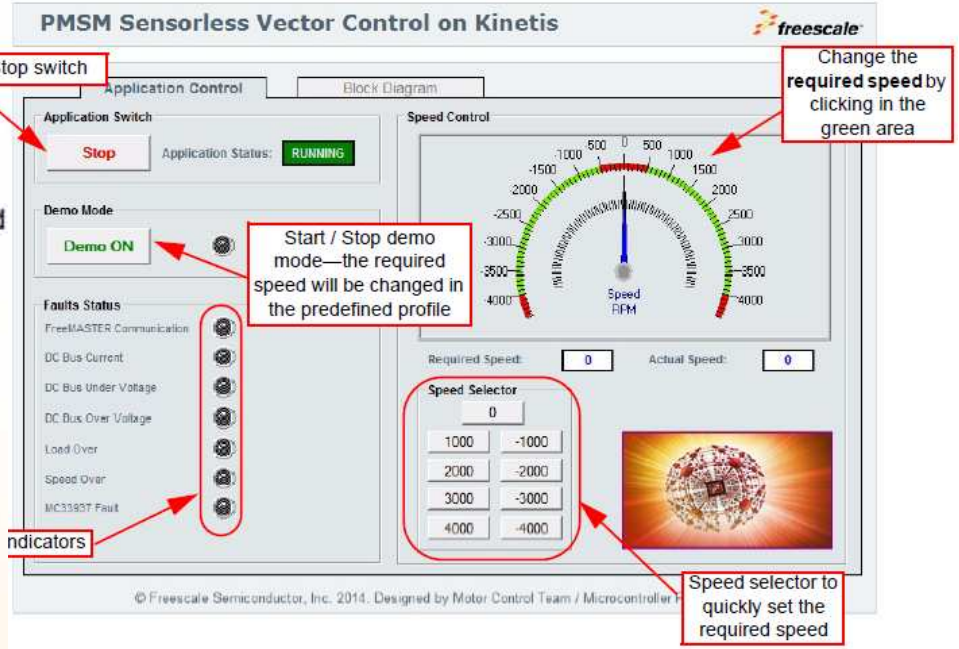

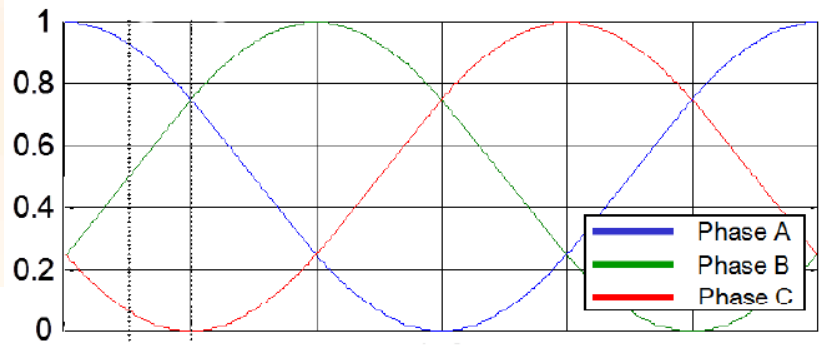

By leveraging Kinetis MCUs(KV10), the Haiku® with SenseME™ ceiling fan is able to detect changes in a room's temperature, humidity and occupancy and automatically adjusts speed, LED lighting to meet them.

MOTOR CONTROL ENABLEMENT HARDWARE

Low Cost Reference Platforms: Hardware + Software

BLDC & PMSM

Complete Reference Design

FRDM-KV31F

FRDM-KV10Z

FRDM-MC-LVPMSM:

- PMSM (Sinusoidal) control
- 24V, 5Amp, 120W

FRDM-MC-LVBLDC:

- BLDC (Trapezoidal) control
- 12V, 5Amp, 60W

FRDM-MC-LVMTR:

- 4000RPM, 90W

Or Your Motor

Tower Reference Platform: Hardware + Software

BLDC & PMSM

TWR Reference Design =

TWR-KV11Z75M

TWR-KV31F120M

TWR-KV46F150M

TWR-KV58F220M

TWR-ELEV

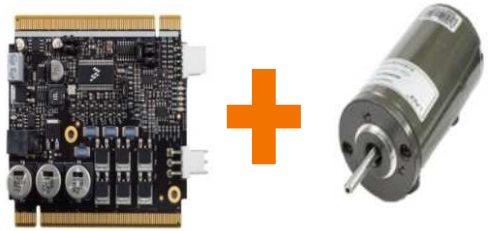

TWR-MC-LV3PH

- PMSM (Sinusoidal) &
- BLDC (Trapezoidal) control
- Includes Linix 4000RPM Motor

High Voltage Reference Platform: Hardware + Software

ACIM, BLDC & PMSM

High Voltage Reference Design =

+

+

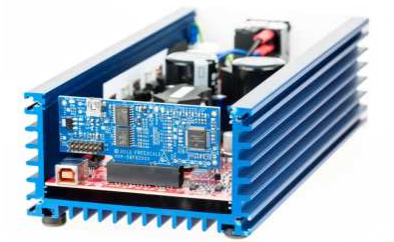

HVP-MC3PH

includes HVP-KV46F150M card

85/230 volt,

1KW 3-ph motor control inverter w/ PFC circuitry

Controller Card

HVP-KV10Z32
HVP-KV11Z75M
HVP-KV31F120M
HVP-KV58F

Your HV motor

Block Diagram

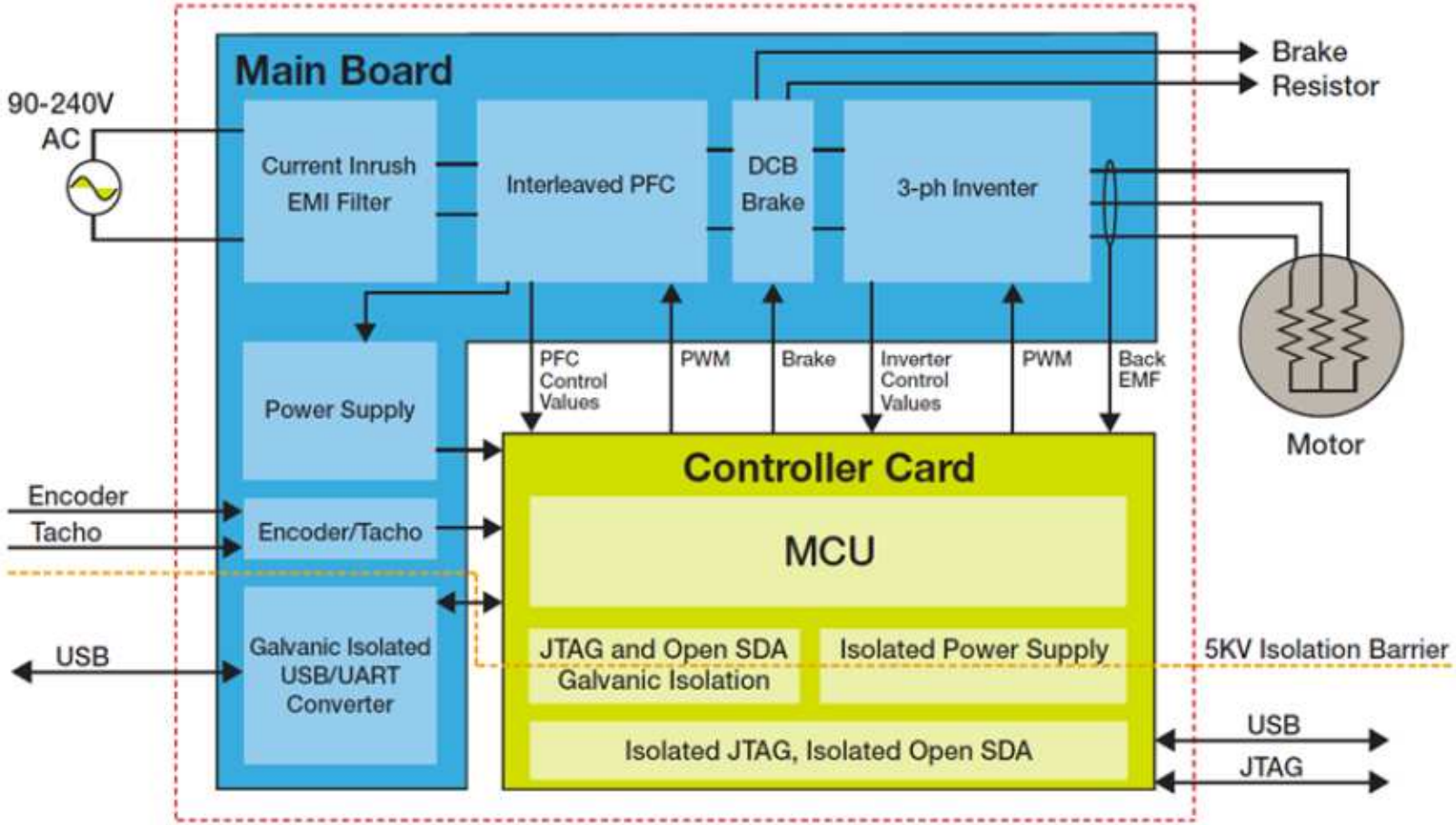

Main Board Controller Card

S/w Enablement Guide

MCAT (Motor Control Application Tuner)

- GUI based FreeMASTER plug-in tool that provides real-time monitoring, tuning and updating of motor control system parameters
- Provided as a plug-in for the FreeMASTER tool. Designed to work with FSL Ref. Design s/w
- http://www.youtube.com/watch?v=ZsLQzSTnhgo
- **Cost: free of charge**
- Supported devices
  - KV1x, KV3x, KV4x,
  - KV5x

FreeMASTER

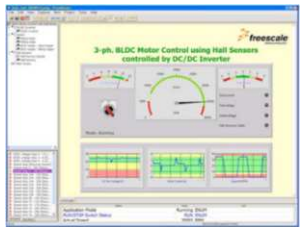

- Complimentary GUI based run-time debug monitor and data visualization tool
- Replaces debugger in situations when the core can not be simply stopped, ideal for motor control and power conversion application development
- http://www.youtube.com/watch?v=vKVlxu8ecdg
- **Cost: free of charge**
- Supported devices
  - KV1x, KV3x, KV4x,
  - KV5x

Motor Control Toolbox

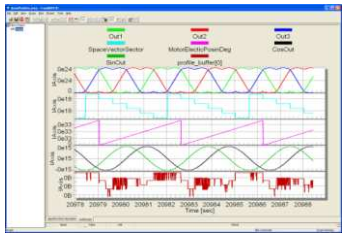

- MATLAB™/Simulink™ modelling environment motor control plug-in tool for automatic code generation. Supports multiple compilers. FreeMASTER compatible.
- http://www.youtube.com/watch?v=5pTuOEWq78g
- Cost: $8K license cost
- Supported devices
  - KV1x, KV3x, KV4x
  - KV5x

POWERSIM Motor Control Design Suite

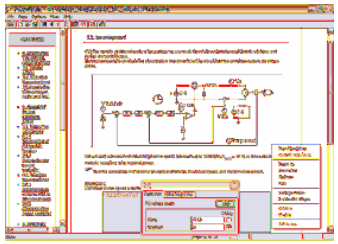

- Low cost Simulation software specifically designed for power electronics and motor drives
- Cost: $700 (1st license)
- Supported devices
  - KV3x (Now)
  - Others to follow

Motor Control Reference Solutions

Motor Topology	Product Supported	Development Platform	Typical Target Applications	Availability	Link
PMSM Sensorless FOC	KV1x, KV3x, KV4x, KV5x	TWR HVP FRDM	General drives, Pumps	Now	PMSM Solution
BLDC Sensorless Trapezoidal	KV1x, KV3x, KV4x, KV5x	TWR FRDM HVP	Fans, Pumps	Now	BLDC Solution
ACIM Sensorless FOC	KV3x, KV4x, KV5x	HVP	Pumps, Fans	Now	ACIM Solution
Dual BLDC Trapezoidal Control	KV11	TWR	Appliances	Now – Contact Marketing	NA
Dual PMSM Sensorless FOC	KV5x	TWR HVP	IoT Motor Control	Now – Contact Marketing	NA

Our reference designs our easily accessible via:

nxp.com/nxpdesigns

Motor Control needs a PhD!

Too Hard to Tune! - I can never get the right level of performance
Too Hard to Debug! - When I have a problem its difficult to resolve
Takes Too Long! - PID tuning takes months to get right
Needs Special Expertise! - Need a motor control expert

Even after I have done all that, it Still Doesn't Work Right!

Motor Control is difficult!!

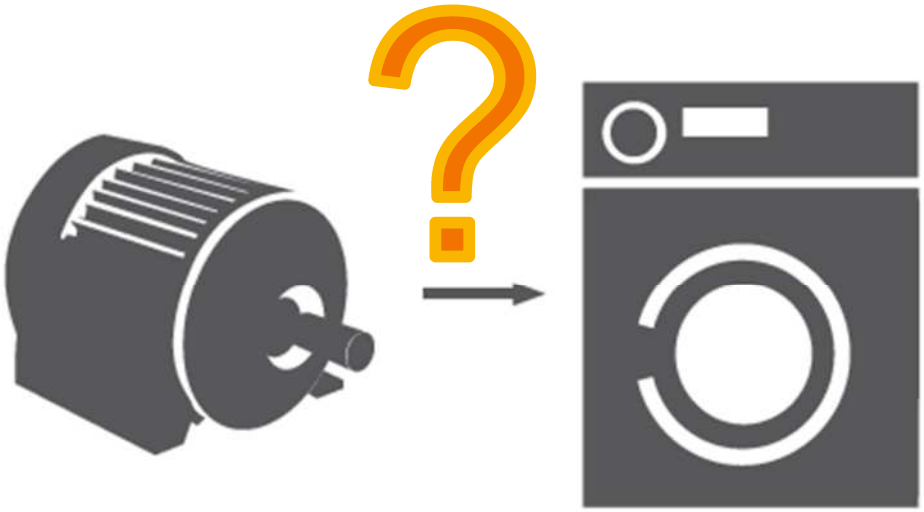

Kinetis Motor Suite(KMS) Graphical User Interface
Spin a motor just in 5 Steps !!

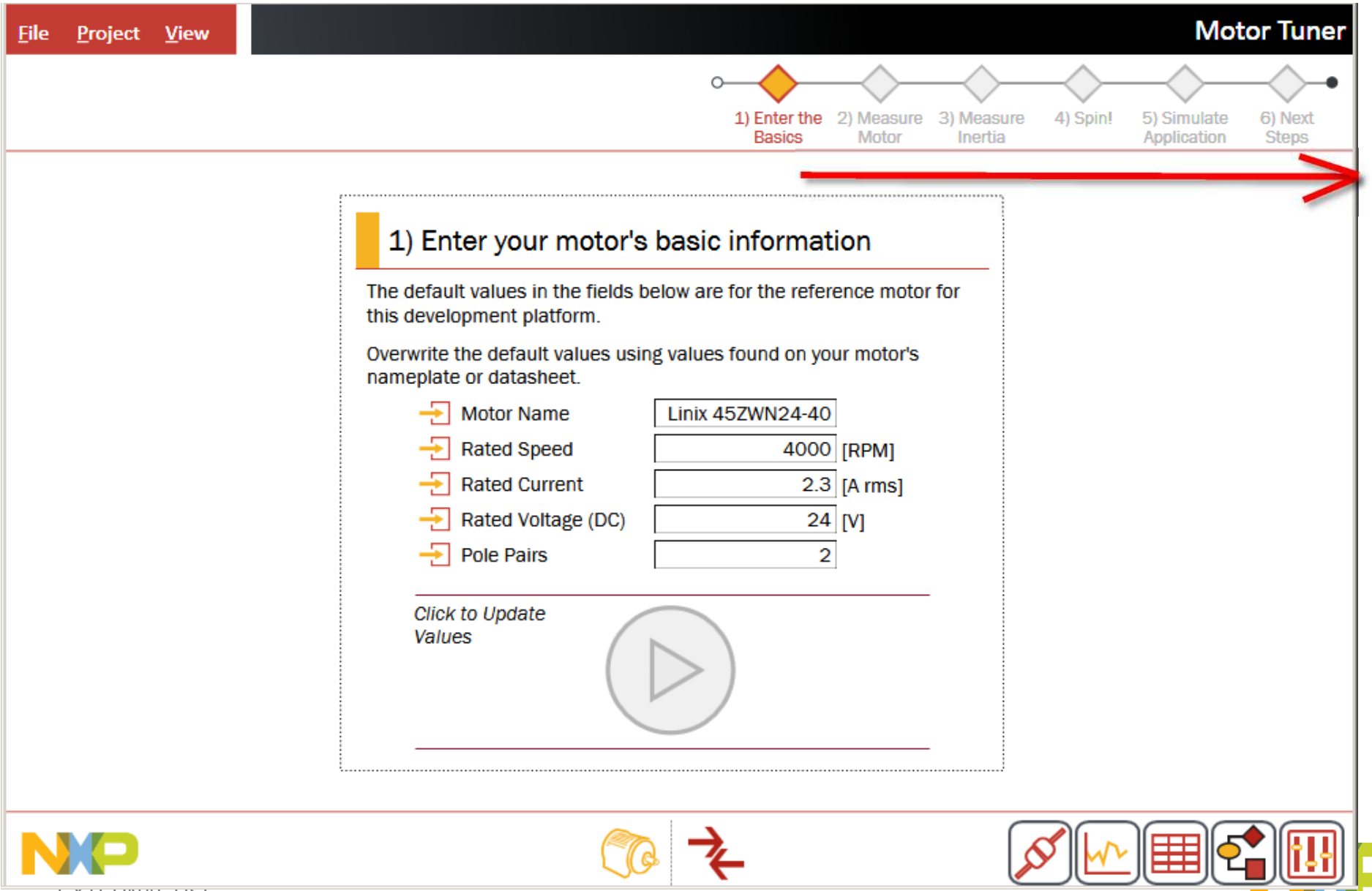

NEW Application Notes & Design Reference Manuals

- DRM144-- Three-Phase BLDC Sensorless Motor Control
- DRM148-- Sensorless PMSM Field-Oriented Motor Control
- AN4911-- 3-Phase PMSM Sensorless FOC Using the MKV31F
- AN4862-- 3-Phase BLDC Sensorless Control Using the MKV10x
- AN4870-- Tuning 3-Phase BLDC Motor Sensorless Control Application Using the MKV10x
- AN5049-- Three-Phase PMSM Sensorless FOC Using the MKV10Z32 with Automated Motor Parameters Identification
- AN4935-- PMSM Sensorless FOC for a Fan Using the Kinetis KV10
- AN4986-- Automated PMSM Parameter Identification
- AN4912-- Tuning 3-Phase PMSM Sensorless Control Application Using MCAT Tool
- AN4680-- PMSM Electrical Parameters Measurement
- AN4642-- Motor Control Application Tuning (MCAT) Tool for 3-Phase PMSM
- KVQRUG-- Kinetis V Series Peripheral Module Quick Reference

SECURE CONNECTIONS
FOR A SMARTER WORLD