Pattye Brown

ZigBee® and Low-Cost Wireless Networks

For sensing and control applications

Figure 1: Example, stand alone transceiver for use with various microcontrollers (Freescale Semiconductor MC1320X)

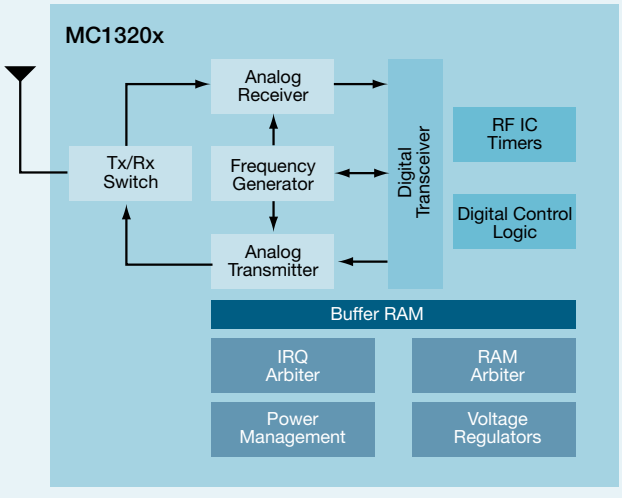

Figure 2: Example, integrated system in package (SiP), transceiver and microcontroller (Freescale Semiconductor MC1321X)

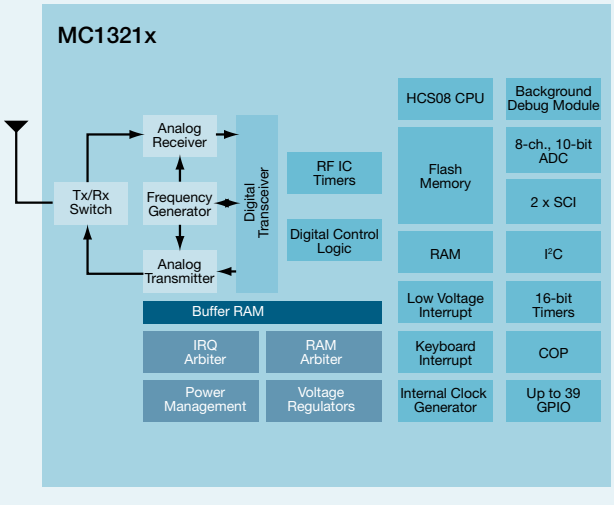

Many sensing, monitoring and control applications offer a unique potential to incorporate low-cost wireless networking functionality. Low-cost wireless networking solutions often require ranges of 30-70 meters or less, data rates of 250 kbps or less and, in many cases, the capability to achieve optimum battery life, particularly for end node functions. The wireless networking implementation can be enhanced with proactive analysis of several key factors prior to design start. A matrix of these key factors will help you choose your components and solutions. Reference design schematics are also provided as a baseline for design initiation. Consider reviewing the following areas when determining your design requirements:

- Integration
- Wireless networking topologies (Figure 3)
  - Radio (RF modem or transceiver)
  - Performance
  - Operating voltage
  - Data rates
  - Range
  - Channel flexibility
  - Output power
  - Sensitivity
  - Power management
  - Peripherals
  - Clocking
  - Multi-tier software
  - Ease of hardware and software design
  - Antenna design
  - Packaging
- Microcontroller (MCU)
  - CPU features
  - Performance
  - Memory options
  - Power management
  - Clock source options
  - Analog to digital conversion
  - Peripherals
  - Packaging
  - In-circuit debug and programming
  - Ease of software and hardware design

Such analysis will provide an organized perspective for engineering decisions, an avenue toward design success, a fast time to market, and an easier implementation of the low-cost wireless networking.

A variety of implementation alternatives for low-cost wireless networking can give you a high level of flexibility in the design process. As one alternative, consider solutions from providers that offer various configurations of stand-alone transceivers to be used in conjunction with a wide selection of MCUs (Figure 1). As a second and equally effective alternative, consider the newest solutions which offer integrated transceiver/MCU products (Figure 2). Reuse of design components and engineering investment may be important as you work on multiple, yet similar, end products. Therefore, a structured evaluation of solution options can be both cost and resource efficient. Well thought out research may provide a basis for several end products to be designed from a single foundation.

Wireless Networking Technologies

The 2.4 GHz industrial, scientific and medical (ISM) band supports multiple short range wireless networking technologies. Each alternative has been developed to optimally serve specific applications or functions. The networking topologies most commonly associated with the 2.4 GHz frequency range are Bluetooth™, WiFi™ and ZigBee® as well as other proprietary solutions. Non-standards-based proprietary solutions offer some risk as they are vendor dependent and thus subject to change.

ZigBee, an IEEE® 802.15.4 standards-based solution, as defined by the ZigBee Alliance, was developed specifically to support sensing, monitoring and control applications. The ZigBee solution offers significant benefits, such as low power, robust communication and a self-healing mesh network. The ZigBee solution frequencies are typically in the 868/915 MHz or 2.4 GHz spectrums.

The ZigBee data rate for technology solutions is 250 Kbps. Power consumption must be extremely low to allow battery life that is measure in years (equivalent to the shelf life of the battery) using alkaline or lithium cells. ZigBee technology theoretically supports up to 65,000 nodes. Common applications in sensing, monitoring and control, which are best supported by a ZigBee technology solution include:

- Personal and medical monitoring
- Security, access control and safety monitoring
- Process sensing and control
- Heating, ventilation and air conditioning (HVAC) sensing and control
- Home, building and industrial automation
- Asset management, status and tracking
- Fitness monitoring
- Energy management

Figure 3: Wireless Networking Technologies

	ZigBee®	Bluetooth®	UWB™	Wi-Fi™	LonWorks®	Proprietary
Standard	IEEE® 802.15.4	IEEE 802.15.1	IEEE 802.15.3a (to be ratified)	IEEE 802.11 a, b, g (n, to be ratified)	EIA 709.1, 2, 3	Proprietary
Industry Organizations	ZigBee Alliance	Bluetooth SIG	UWB Forum and WiMedia™ Alliance	WiFe Alliance	LonMark Interoperability Association	N/A
Topology Mesh, Star, Tree	Star	Star	Star	Medium-dependent	P2P, Star, Mesh	
RF Frequency	868/915 MHz 2.5 GHz	2.4 GHz	3.1–10.6 GHz (U.S.)	2.4 GHz 5.8 GHz	N/A (wired technology)	433/868/900 MHz 2.4 GHz
Data Rate	250 Kbps	723 Kbps	110 Mbps–1.6 Gbps	10–105 Mbps	15 Kbps–10 Mbps	10–250 Kbps
Range	10–300m	10m	4–20m	10–100m	Medium-dependent	10–70m
Power	Very low	Low	Low	High	Wired	Very Low–Low
Battery Operation (Life)	Alkaline (Months–Years)	Rechargeable (Hours–Days)	Rechargeable (Hours)	N/A	Alkaline (Months–Years)	
Nodes	65,000	8	128	32	32,000	100–1,000

RF Modem or Transceiver (Radio)

Several radio frequency (RF) modem features should be considered for implementing low-cost wireless networking systems. Most low-cost personal area network (PAN) RF modem solutions recommend power supplies from 2.0–3.6V.

For lightweight wireless networks, low data rates are adequate to support monitoring, sensing and control functions and also help manage system power consumption. 250 kbps offset quadrature phase-shift keying (O-QPSK) data in 2 MHz channels with 5 MHz spacing between channels with full spread-spectrum encode and decode is most often selected for these application types. In these environments, the transceiver wakes up, listens for an open channel and transmits small packets of data at lower data rates. Then it shuts down until the next event is indicated. The sequencing, fast power on latency, lower data rates and small data packets allow an 802.15.4 transceiver to select time increments where the data transmission will be most effective.

As mentioned previously, for sensing and control subsystems, data transmission range and power requirements are best supported with ZigBee technology solutions. The typical range defined by the ZigBee Alliance specification is 10–70m, however, many solutions offer line-of-sight ranges well beyond this.

It is important to review the number and types of transceiver channels available in relation to the planned design. Selectable transceiver channels offer the designer the option to take advantage of channels which minimize noise, particularly staying away from the more crowded 2.4GHz WiFi channels.

You should look for typical transmit output power in the 0 dBm up to +4 dBm range. Receive sensitivity typically in the -90 dBm range will offer adequate capabilities for sensing, monitoring and control functions. Buffered transmit and receive data packets simplify management of low-cost microcontrollers that will be used with the transceiver. The radio or transceiver should also offer link quality and energy detect functions for network performance evaluation.

Multiple power-down modes offer power saving features to minimize system power consumption. These typically include off current, hibernate current and doze currents in the single digit microamp (μA) ranges. Programmable output power also allows the designer to reduce power consumption where range or environment require less power to achieve transmit and receive objectives. Ensuring these functions are offered in the selected solution will aid in maximizing battery life in battery operated full-function/coordinator or end node devices, often to the full shelf life of the battery.

Look for additional essential peripherals, such as internal timer comparators, which are available to reduce MCU resource requirements. General purpose input/output ports (GPIO) are available in various different configurations and counts. GPIO is heavily dependent on interface requirements with other devices within the application. In solutions which offer the flexibility of a transceiver with separate MCU, the communications is handled through the serial peripheral interface (SPI) port. As would be expected, when the radio and MCU are integrated into a single package or chip, the transceiver communicates to the MCU through the onboard or internal SPI command channel. Also, integrated solutions which include low noise amplifiers (LNA), power amplifiers (PA) with internal voltage controlled oscillator (VCO), integrated transmit/receive switch, on-board power supply regulation and full spread-spectrum encoding and decoding reduce the need for external components in the system and lower overall system cost.

A wide array of system clock configurations gives you flexibility in end system design. Options which allow either an external clock source or crystal oscillator for CPU timing are most suitable. A 16 MHz external crystal is typically required for the modem clocking. The ability to trim the modem crystal oscillator frequency helps to maintain the tight standards required by the IEEE® 802.15.4 specification.

Depending on the complexity and requirements of the end design, you are best served by vendors who offer multiple network software topology alternatives. These may include a simple media access controller (MAC) configuration which utilizes MCU flash memory sizes from 4 KB and up and supports point-to-point or simple star networks. Fully 802.15.4 compliant MAC and full ZigBee compatible topologies, while requiring more memory, provide the added support of mesh and cluster tree networks.

Ease the design process by using vendor provided reference designs, hardware development tools and software development tools. For hardware development tools, simple getting started guides, essential boards with incorporated LED and LCD for a visual monitor plus cables and batteries provide an easy out-of-the-box experience. These tools help you set up a network within minutes and actually evaluate network and solution performance. In the past some software design tools, specifically those which support fully ZigBee compliant networks, have been extremely difficult to use. To reduce the complexity of RF modem preparation, look for vendors that offer graphical users interface (GUI)-based software design tools that walk the designer through a step-by-step transceiver set-up.

Figure 4: 13192 SARD Reference Block Diagram

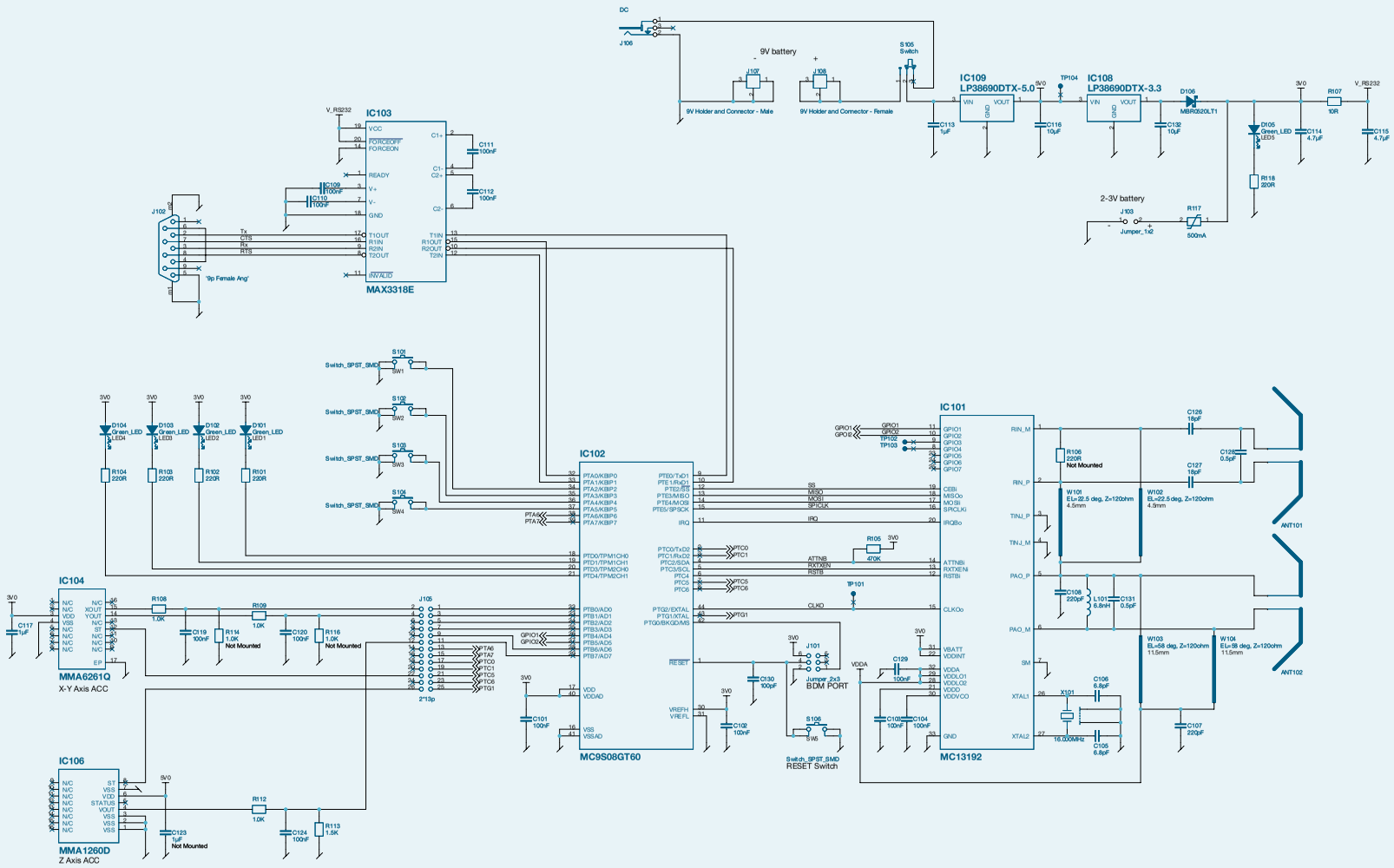

Figure 5: 13213 SED Reference Design Schematic

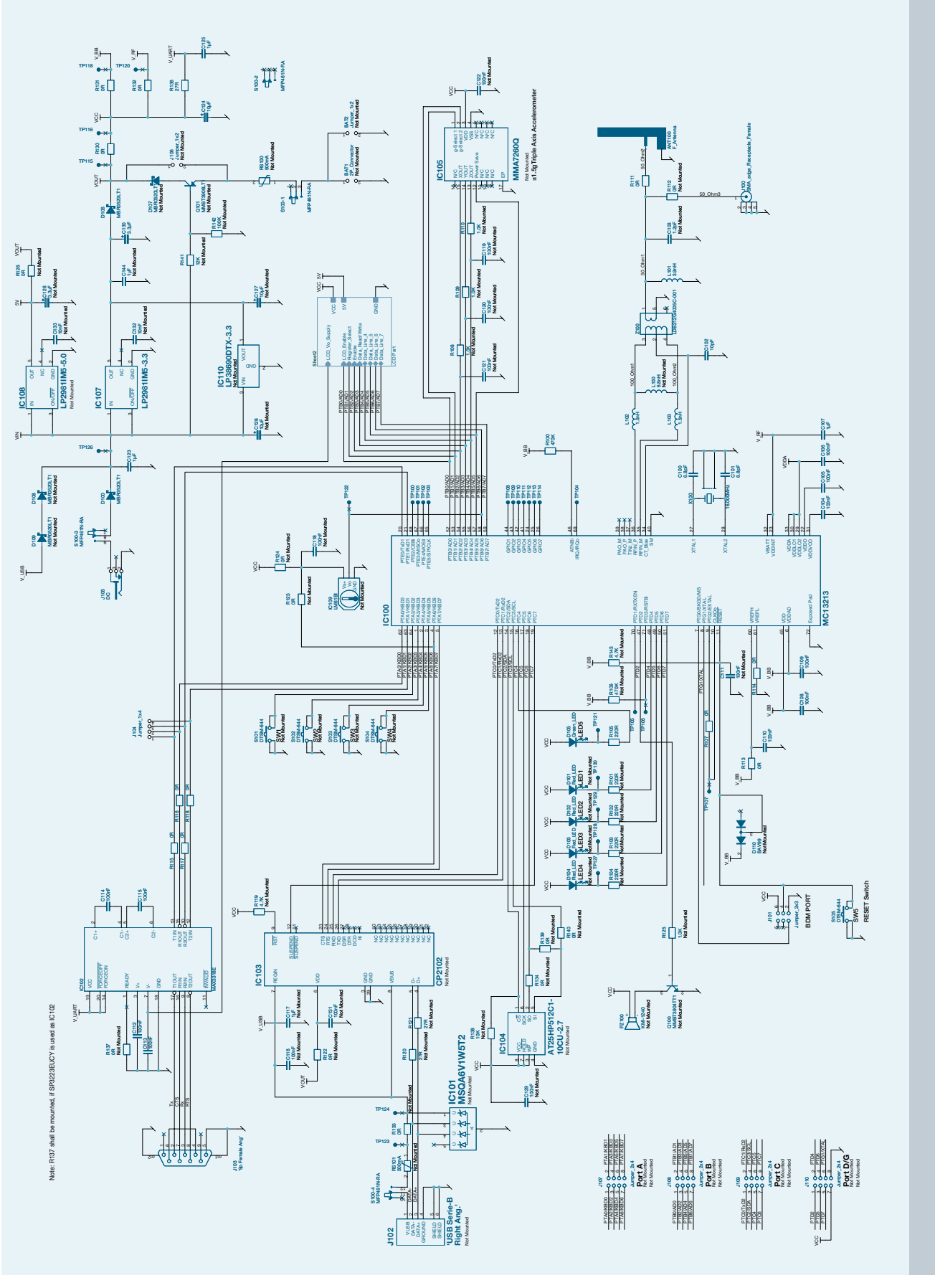

Antenna design can be a complex issue, particularly for digital designers who have limited to no experience in RF design. Typically, designers will take into account such factors as selecting the correct antenna, antenna tuning, matching, gain/loss and knowing the required radiation pattern. It is advisable to gain a basic knowledge of antenna factors through application notes provided by the transceiver vendor. However, most digital engineers prefer to consider working with a vendor solution where antenna design is provided. This allows them to focus on the application design. Look for antenna solutions where the antenna design is offered in completed Gerber files, which can be provided directly to the printed circuit board manufacturer for implementation. A vendor who provides such antenna design solutions eliminates the issues associated with good antenna design, good range and stable throughputs in wireless applications.

The quad flat no-lead package (QFN) is the optimum small footprint packaging solution for the transceiver portion of a low cost wireless networking subsystem. The packaging takes into consideration the board space limitations often driven by sensing and control solutions. Size is particularly important in the case of end nodes that are often battery operated with limited implementation space.

Microcontroller

Multiple alternatives exist in selecting a sensing and control implementation scheme. Some designers select a system in package (SiP) or platform in package™ (PiP) which includes transceiver and MCU functionality in a single package. However, should you opt for a stand-alone transceiver and microcontroller configuration, you gain the flexibility to choose from a variety of MCUs to mix and match for multiple end product configurations.

When choosing the latter implementation scheme, appropriate MCU selection requires thorough research. MCU selection depends upon matching the complexity of the sensing and control application with suitable performance factors, memory configurations and peripheral modules. Often for low cost wireless sensing systems, 8-bit MCUs in the 20 MHz CPU operating frequency (10 MHz bus clock) range offer an easy-to-implement, low-cost alternative which best suits these applications. Background debugging and breakpoint capability to support single breakpoint (tag and force options) setting during in-circuit debug (plus two breakpoints in on-chip debug module) offer the preferred debugging environment. Many MCU solutions provide support for up to 32 interrupt/reset sources.

Memory requirements for sensing and control applications are typically 8 KB of flash with 512B of RAM or as low as 4 KB of flash with 256B of RAM. Flash read, program or erase over the full operating voltage and temperature are essential.

A variety of operation modes provides precise control over power consumption, a key feature for extending battery operated solutions. Look for MCUs that support normal operating (run) mode, active background mode for on-chip debug, a variety of stop modes (bus and CPU clocks are halted) and wait mode alternatives.

Consider a microcontroller with an internal clock source module containing a frequency-locked-loop (FLL) controlled by an internal or external reference with precision trimming of internal reference that allows 0.2 percent resolution and 2 percent deviation over temperature and voltage. The internal clock source module should support bus frequencies from 1 MHz to 10 MHz. MCUs with selectable clock inputs for key modules provide control over the clock to drive the module function. As well, look for MCUs with a low-power oscillator module with software selectable crystal or ceramic resonator in the range of 31.25 KHz to 38.4 KHz or 1 MHz to 16 MHz that supports external clock source input up to 20 MHz.

It is essential that the chosen MCU offer system protection, including such options as watchdog computer operating properly (COP) reset with an alternative to run from a dedicated 1 KHz internal clock source or bus. Other must-have system protection features include low-voltage detection with reset or interrupt, illegal opcode detection with reset, illegal address detection with reset and flash block protection.

A variety of embedded peripherals will ease the implementation of your application. An 8-channel, 10-bit analog-to-digital (ADC) converter is recommended for accurate successive approximation. Specific functions should include automatic compare, asynchronous clock source, temperature sensor, internal bandgap reference channel and an ADC that is hardware triggerable using the real-time interrupt (RTI) counter.

Other essential peripherals for sensing and control applications include: an analog comparator module (ACMP) with an option to compare internal reference; serial communications interface module (SCI); serial peripheral interface module (SPI); inter-integrated circuit (I^2C) bus module; 2-channel timer/pulse-width modulator for input capture; output compare; buffered edge-aligned PWM or buffered center-aligned PWM; 8-bit modulo timer module with prescaler and 8-pin keyboard interrupt module with software selectable polarity on edge or edge/level modes.

There are multiple small foot print MCU packaging options that satisfy sensing and control design requirements. These help optimize limited board space, particularly in end node, battery operated functions. A few of the MCU packages that meet these considerations are low pin-count plastic dual in-line (PDIP), quad flat no-lead (QFN), thin shrink small outline (TSSOP), dual flat no-lead (DFN) and narrow body, small outline (NB SOIC) packages.

It is also prudent to consider as part of the MCU selection hardware and software design tool ease-of-use, documentation clarity, reference design and application code availability and other design support offerings. Similarly, on the RF or modem side of the design, an effective integrated development environment (IDE) should include GUI-driven tools with built-in features and utilities that simplify coding and project file management to expedite the design process. Expert tools that abstract the hardware layer and generate optimized, MCU-specific C code tailored to the application allow you to concentrate on application concepts. Fast and easy debug as well as a flash programming capability need to be considered. It is also helpful to have access to features that allow the designer to create reusable software components for reuse between projects.

Schematics for Sensing, Monitoring and Control Subsystems

A reference design schematic for sensing, monitoring and control subsystems is often of value as an application baseline from which to evolve design specific requirements. As an example of a design using a system in package (SiP) solution, shown below is the schematic for the Freescale 1321x-SRB sensor reference board, which is included in the 1321XDSK (developer's starter kit), 1321xNSK (network starters kit) and 1321xEVK (ZigBee evaluation kit). The 1321x-SRB includes the Freescale MMA7260Q tri-axis acceleration sensor and, used with the starter kits, helps you set up working networks within a matter of minutes. The board offers a reference design application that is a starting point for sensing application development (Figure 5).

You also have the option to use a stand alone transceiver and MCU alternative to provide additional design flexibility. For example, the block diagram below is Freescale's 13192 sensor application reference design for sensing, monitoring and control subsystems. Completed boards based on this design are included in our 13192DSK-A0E (developer's starter kit) and 13192EVK-SFTE (evaluation kit) development kits (Figure 4).

Supporting files for the above reference designs are available via web download. The download folder includes schematics, bill of materials, gerber files and other necessary documentation for complete reference design implementation.

Freescale's Wireless Networking Solutions for Sensing, Monitoring and Control Applications

We offers an exceptional set of solutions for the digital engineer who wants to establish a new paradigm in end products. The broad portfolio meets the design requirements noted above that are essential to low cost, wireless networking implementations. Sample products include:

- RF modem or transceiver solutions (Simple MAC, 802.15.4 MAC and ZigBee), which can be used with a variety of MCUs (MC1319x and MC1320x transceiver families are used with the HCS08 and ColdFire MCU families)
- Integrated transceiver solutions (Simple MAC, 802.15.4 MAC and ZigBee) with MCU system in package (SiP) solutions (MC1321x SiP family)
- Analog components
- Sensor components

For easy-to-use implementations of ZigBee and other low-cost, low-power wireless networks, Freescale is your resource for reference designs, application notes, hardware development tools and software design tools. For more detailed product information visit us at www.freescale.com/zigbee.

Pattye Brown is a technical marketing engineer and channel marketing liaison at Freescale Semiconductor; she has been with the company for 23 years. She holds a bachelor's degree in industrial engineering and a masters degree in business administration and marketing.