Ethernet Audio Video Bridging (AVB) Overview

AMF-AUT-T1064

Rebeca Delgado
Field Applications Engineer

September 2013

Freescale, the Freescale logo, AltiVec, C-5, CodeTEST, CodeWarrior, ColdFire, ColdFire+, C-Ware, the Energy Efficient Solutions logo, Kinetis, mobileGT, PEG, PowerQUICC, Processor Expert, QorIQ, Qorivva, SafeAssure, the SafeAssure logo, StarCore, Symphony and VortiQa are trademarks of Freescale Semiconductor, Inc., Reg. U.S. Pat. & Tm. Off. Airfast, BeeKit, BeeStack, CoreNet, Flexis, Layerscape, Magnéti, MXC, Platform in a Package, QorIQ Qonverga, QUICC Engine, Ready Play, SMARTMOS, Tower, TurboLink, Vybrid and Xtrinsic are trademarks of Freescale Semiconductor, Inc. All other product or service names are the property of their respective owners. © 2013 Freescale Semiconductor, Inc.

Motivation for reuse of Ethernet in Automotive

Telecommunication

Circuit Switched Networks

Automation

Field bus technology

Aerospace

Avionic field busses

Voice over IP (VoIP) / Paket Orientated Solutions

Ethernet Real Time Solutions

Avionic Fieldbusses (AFDX / AIRBUS)

Ethernet & IP-Technology is growing

Freescale, the Freescale logo, AltiVec, C-5, CodeTEST, CodeWarrior, ColdFire, ColdFire+, C-Ware, the Energy Efficient Solutions logo, Kinetis, mobileGT, PEG, PowerQUICC, Processor Expert, QorIQ, Qorivva, SafeAssure, the SafeAssure logo, StarCore, Symphony and VortiQa are trademarks of Freescale Semiconductor, Inc., Reg. U.S. Pat. & Tm. Off. Airfast, BeeKit, BeeStack, CoreNet, Flexis, Layerscape, MagniV, MRC, Platform in a Package, QorIQ Qonverge, QUICC Engine, Ready Play, SMARTMOS, Tower, TurboLink, Vybrid and Xtrinsic are trademarks of Freescale Semiconductor, Inc. All other product or service names are the property of their respective owners. © 2013 Freescale Semiconductor, Inc.

Ethernet in the Automobile

- Ethernet has growing potential in automotive networking applications

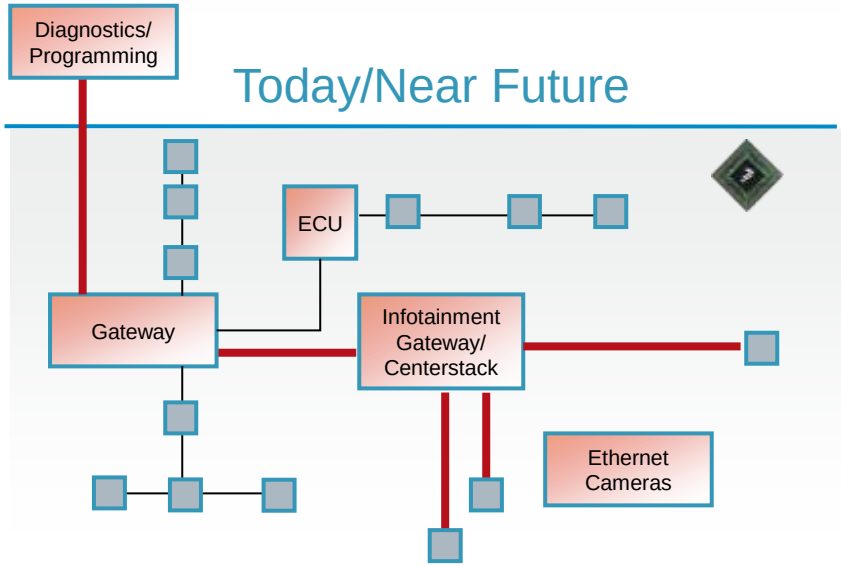

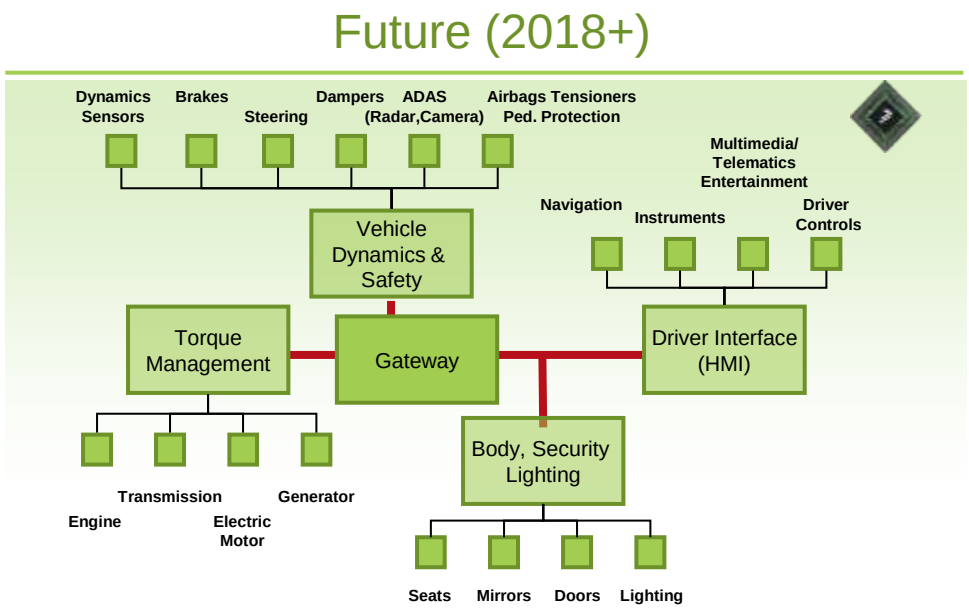

- Potential Applications:
  - Vehicle diagnostics
  - Vehicle programming
  - Interface to infotainment space
  - Communications within infotainment space (MLB replacement)
  - Ethernet based cameras
  - Etc .

- Potential Applications:
  - As Today but also as a vehicle networking architecture backbone

Ethernet in the Body/Gateway Domain

Freescale, the Freescale logo, AltiVec, C-5, CodeTEST, CodeWarrior, ColdFire, ColdFire+, C-Ware, the Energy Efficient Solutions logo, Kinetis, mobileGT, PEG, PowerQUICC, Processor Expert, QorIQ, Qorivva, SafeAssure, the SafeAssure logo, StarCore, Symphony and VortiQa are trademarks of Freescale Semiconductor, Inc., Reg. U.S. Pat. & Tm. Off. Airfast, BeeKit, BeeStack, CoreNet, Flexis, Layerscape, Magnéti, MXC, Platform in a Package, QorIQ Qonverga, QUICC Engine, Ready Play, SMARTMOS, Tower, TurboLink, Vybrid and Xtrinsic are trademarks of Freescale Semiconductor, Inc. All other product or service names are the property of their respective owners. © 2013 Freescale Semiconductor, Inc.

Ethernet in Body/Gateway Domain

- **Freescale's products today support current automotive Ethernet applications**
  - MPC5668G (Fado) – FEC - Fast Ethernet Controller, 10/100Mbps
    - Ethernet primarily for diagnostics, programming and use in infotainment gateways
  - MPC5748G (Calypso) – Enhanced Ethernet, 10/100Mbps, 1588, AVB support
    - As above but with improved support for interfacing to/acting as an infotainment gateway

- **Freescale's future products will address emerging Ethernet needs**
  - Next generation Gateway products (2016+) will likely include an Ethernet Switch to help support an automotive Ethernet networking backbone
  - Feature set of next generation Gateway MCUs with Ethernet Switch is to be defined as it remains to be seen where this Gateway will reside; will it be in the infotainment domain or will it be a standalone gateway.

Freescale, the Freescale logo, AltiVec, C-5, CodeTEST, CodeWarrior, ColdFire, ColdFire+, C-Ware, the Energy Efficient Solutions logo, Kinetis, mobileGT, PEG, PowerQUICC, Processor Expert, QorIQ, Qorivva, SafeAssure, the SafeAssure logo, StarCore, Symphony and VortiQa are trademarks of Freescale Semiconductor, Inc., Reg. U.S. Pat. & Tm. Off. Airfast, BeeKit, BeeStack, CoreNet, Flexis, Layerscape, MagniV, MRC, Platform in a Package, QorIQ Qonverge, QUICC Engine, Ready Play, SMARTMOS, Tower, TurboLink, Vybrid and Xtrinsic are trademarks of Freescale Semiconductor, Inc. All other product or service names are the property of their respective owners. © 2013 Freescale Semiconductor, Inc.

MPC5748G Block Diagram – Integrated High End BCM/Gateway

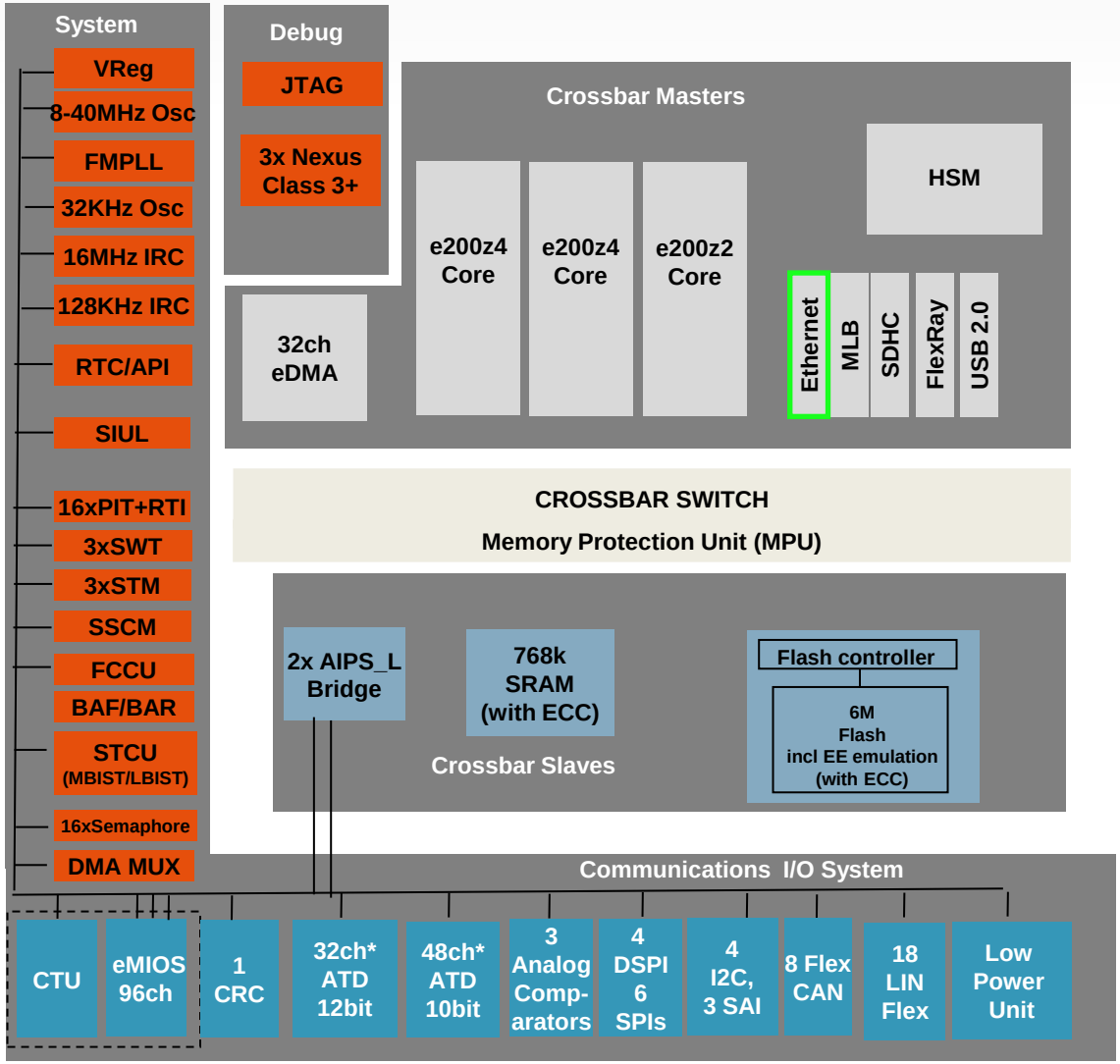

*** Mixture of internal and external channels**

Applications:

- High end Gateway and Body Modules

Key Characteristics:

- 2x e200z4 + 1x z2 cores, FPU on z4 cores
- 160 MHz max for z4s and 80 MHz on z2
- HSM Security Module option supports both SHE and EVITA low/medium standard
- Media Local Bus supports MOST communication
- USB 2.0 support interfacing to 3G modem and infotainment domain
- Ethernet 10/100 Mbps RMII, MII, +1588, AVB
- SDHC provides standard SDIO interface
- Low Power Unit provides reduced CAN, LIN, SPI, ADC functionality in low power mode
- Designed to ISO26262 process for use in ASIL B
- -40 to +125C (ambient)
- 3.0V to 5.5V

Packages:

- 176 LQFP, 256 BGA, 324 BGA

MPC5746C Block Diagram – Mid End BCM/Gateway

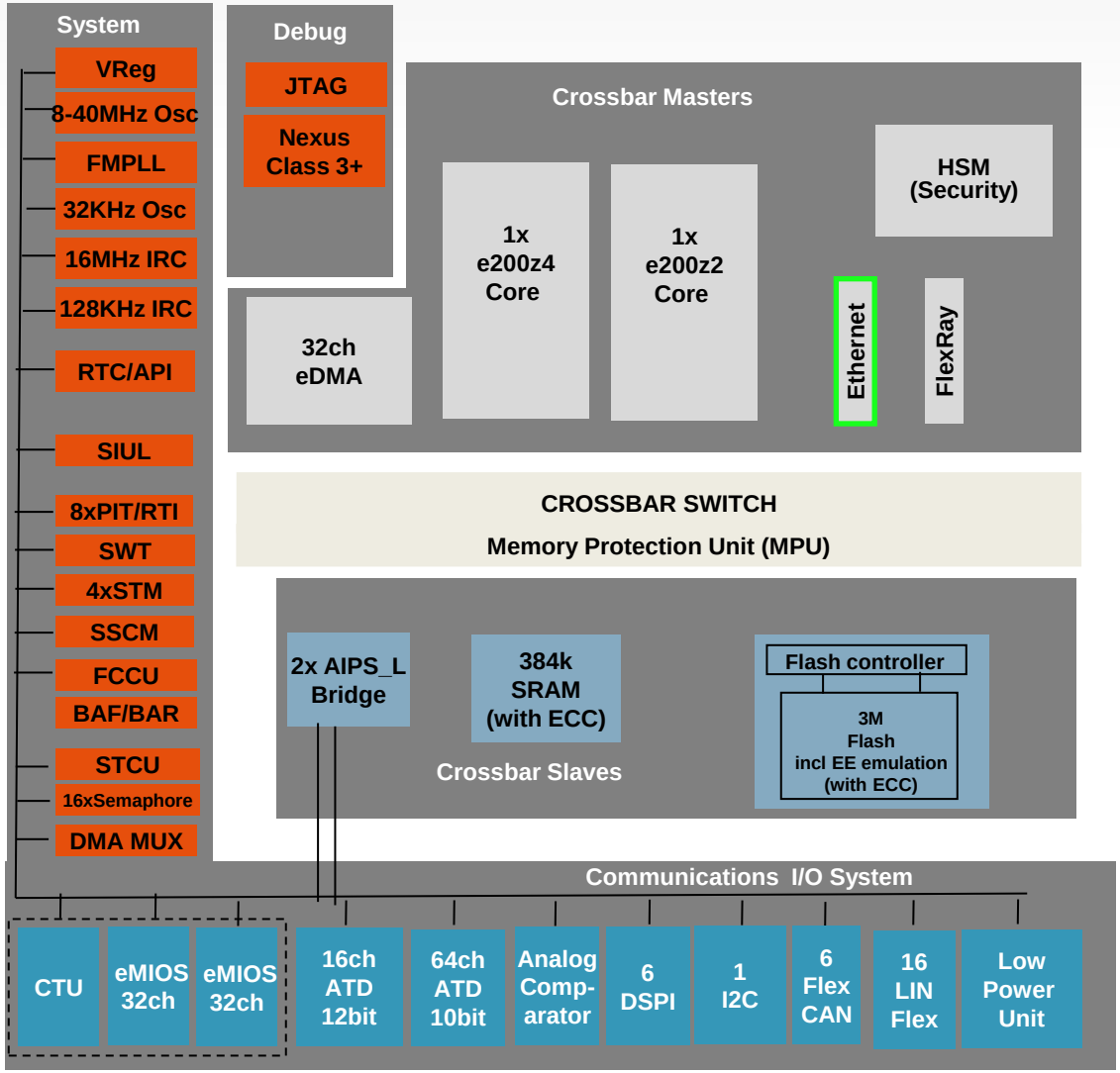

Applications:

- Mid End Gateway and Body Modules

Key Characteristics:

- 1x e200z4 with FPU, z2
- Target up to 160 MHz maximum operation
- HSM Security Module option supports both SHE and EVITA low/medium standard
- FlexRay 2.1, 128 message buffers
- Ethernet option 10/100 Mbps RMII, MII, +1588, AVB
- Low Power Unit provides reduced CAN, LIN, SPI, ADC functionality in low power mode
- Low power modes STOP and StandBY
- -40 to +125C (ambient)
- 3.0V to 5.5V

Package:

- 100/144 LQFP (TBD)
- 176 LQFP
- 256 BGA (Development and Production)

Ethernet AVB / AVA

Freescale, the Freescale logo, AltiVec, C-5, CodeTEST, CodeWarrior, ColdFire, ColdFire+, C-Ware, the Energy Efficient Solutions logo, Kinetis, mobileGT, PEG, PowerQUICC, Processor Expert, QorIQ, Qorivva, SafeAssure, the SafeAssure logo, StarCore, Symphony and VortiQa are trademarks of Freescale Semiconductor, Inc., Reg. U.S. Pat. & Tm. Off. Airfast, BeeKit, BeeStack, CoreNet, Flexis, Layerscape, Magnéti, MXC, Platform in a Package, QorIQ Qonverge, QUICC Engine, Ready Play, SMARTMOS, Tower, TurboLink, Vybrid and Xtrinsic are trademarks of Freescale Semiconductor, Inc. All other product or service names are the property of their respective owners. © 2013 Freescale Semiconductor, Inc.

Protocol Layers

		Audio Video Transport	Time Sync	Diagnosis and Flash Update	Control Communication	Address Configuration
Application Presentation Session	Layer 5-7	IEEE 1722 AVB	IEEE 802.1AS (PTPv2) AVB	DoIP	SOME/IP	DHCP
Transport	Layer 4			TCP and/or UDP		
Network	Layer 3			IP		
Data	Layer 2	IEEE Ethernet MAC + VLAN				
Physical	Layer 1	Automotive Ethernet Physical Layer				

Freescale, the Freescale logo, AltiVec, C-5, CodeTEST, CodeWarrior, ColdFire, ColdFire+, C-Ware, the Energy Efficient Solutions logo, Kinetis, mobileGT, PEG, PowerQUICC, Processor Expert, QorIQ, Qorivva, SafeAssure, the SafeAssure logo, StarCore, Symphony and VortiQa are trademarks of Freescale Semiconductor, Inc., Reg. U.S. Pat. & Tm. Off. Airfast, BeeKit, BeeStack, CoreNet, Flexis, Layerscape, MagniV, MRC, Platform in a Package, QorIQ Qonverge, QUICC Engine, Ready Play, SMARTMOS, Tower, TurboLink, Vybrid and Xtrinsic are trademarks of Freescale Semiconductor, Inc. All other product or service names are the property of their respective owners. © 2013 Freescale Semiconductor, Inc.

Ethernet AVB

- **Ethernet Audio Video Bridging** is set of technical standards that allow time-synchronized low latency streaming services through IEEE 802 networks
- **Specifications required:**
  - IEEE 1722 Layer 2 Transport Protocol
  - IEEE 802.1AS Timing and Synchronization
- **Further Specifications, that can either be optional or will not be used**
  - IEEE 802.1Qat: Stream Reservation Protocol (SRP)
  - IEEE 802.1Qav: Forwarding and Queuing for Time-Sensitive Streams (FQTSS)
  - IEEE 802.1BA: Audio Video Bridging Systems
  - IEEE 1722.1 Device Discovery, Enumeration, Connection Managment and Control Protocol (DECC)

Freescale, the Freescale logo, AltiVec, C-5, CodeTEST, CodeWarrior, ColdFire, ColdFire+, C-Ware, the Energy Efficient Solutions logo, Kinetis, mobileGT, PEG, PowerQUICC, Processor Expert, QorIQ, Qorivva, SafeAssure, the SafeAssure logo, StarCore, Symphony and VortiQa are trademarks of Freescale Semiconductor, Inc., Reg. U.S. Pat. & Tm. Off. Airfast, BeeKit, BeeStack, CoreNet, Flexis, Layerscape, MagniV, MRC, Platform in a Package, QorIQ Qonverge, QUICC Engine, Ready Play, SMARTMOS, Tower, TurboLink, Vybrid and Xtrinsic are trademarks of Freescale Semiconductor, Inc. All other product or service names are the property of their respective owners. © 2013 Freescale Semiconductor, Inc.

IEEE 1722 Layer 2 Transport Protocol

- **Layer 2 Transport Protocol for encapsulation of streaming data**
- **Implementation at Layer 2 allows for efficient HW implementation**
- **This protocol is implemented in the Ethernet Streaming Software from Freescale**

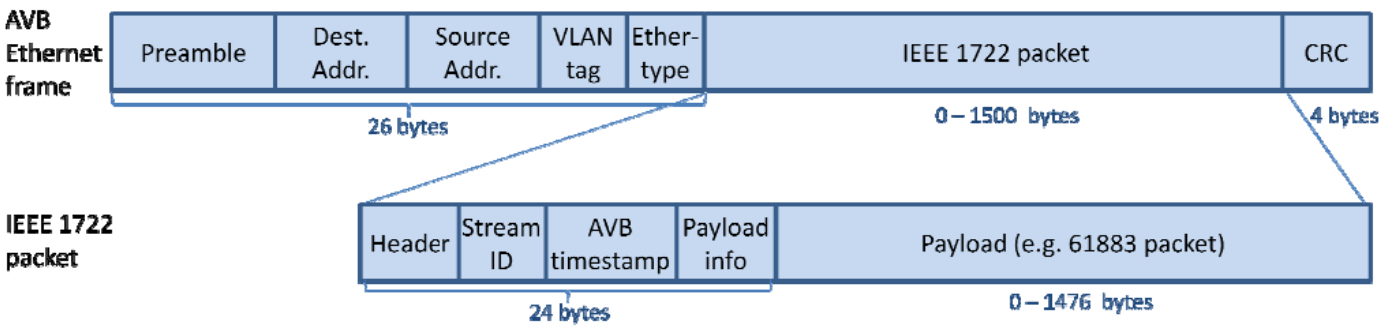

IEEE 802.1AS Timing and Synchronization

- Subset of IEEE 1588 Precision Time Protocol
- Common "application clock" between the sources and sinks
- IEEE 802.1 AS adds a time stamp for the Ethernet packages. **The actual protocol is implemented in SW !**

- System clock accuracy requirements determine, whether time stamping needs to be implemented in HW
  - Clock requirements of less than hundreds of µs accuracy **do NOT require any time stamping HW**
  - Clock requirements of sub 1 µs (down to something between 50-200 ns) do require dedicated time stamping HW.
    - Available on MPC5604E, MPC574xG, Vybrid, i.MX53, i.MX6x

IEEE 802.1Qav: Forwarding and Queuing for Time-Sensitive Streams - generic

- A common **Misconception** is, that any AVB or AVA application would require dedicated traffic shaping HW in the Ethernet controller.
- The System Requirements need to be analyzed, how those can be most efficiently implemented.

- "Does your MCU / MPU support AVB?"

IEEE 802.1Qav: Forwarding and Queuing for Time-Sensitive Streams – Streaming Sinks

- Streaming sinks do not do policing of AVB incoming traffic.

  →Sink endpoint do not have to have different queues for the received traffic classes.

  – Requirement for HW receive queues is application specific,
    - A single streaming format endpoint will not want to use multiple class queues.
    - A multi function infotainment box might want to have HW receiving queues.

Freescale, the Freescale logo, AltiVec, C-5, CodeTEST, CodeWarrior, ColdFire, ColdFire+, C-Ware, the Energy Efficient Solutions logo, Kinetis, mobileGT, PEG, PowerQUICC, Processor Expert, QorIQ, Qorivva, SafeAssure, the SafeAssure logo, StarCore, Symphony and VortiQa are trademarks of Freescale Semiconductor, Inc., Reg. U.S. Pat. & Tm. Off. Airfast, BeeKit, BeeStack, CoreNet, Flexis, Layerscape, MagniV, MRC, Platform in a Package, QorIQ Qonverge, QUICC Engine, Ready Play, SMARTMOS, Tower, TurboLink, Vybrid and Xtrinsic are trademarks of Freescale Semiconductor, Inc. All other product or service names are the property of their respective owners. © 2013 Freescale Semiconductor, Inc.

IEEE 802.1Qav: Forwarding and Queuing for Time-Sensitive Streams – Streaming Sources

- Again, requirement for HW source queues is application specific
  - A synchronous stream source does not need to queue the stream data
    - Best effort traffic should be artifically throttled to ensure minimum latency
  - An asynchronous stream source would ideally have a HW traffic shaper to control the rate of the decoding process by back pressuring.

Freescale, the Freescale logo, AltiVec, C-5, CodeTEST, CodeWarrior, ColdFire, ColdFire+, C-Ware, the Energy Efficient Solutions logo, Kinetis, mobileGT, PEG, PowerQUICC, Processor Expert, QorIQ, Qorivva, SafeAssure, the SafeAssure logo, StarCore, Symphony and VortiQa are trademarks of Freescale Semiconductor, Inc., Reg. U.S. Pat. & Tm. Off. Airfast, BeeKit, BeeStack, CoreNet, Flexis, Layerscape, MagniV, MRC, Platform in a Package, QorIQ Qonverge, QUICC Engine, Ready Play, SMARTMOS, Tower, TurboLink, Vybrid and Xtrinsic are trademarks of Freescale Semiconductor, Inc. All other product or service names are the property of their respective owners. © 2013 Freescale Semiconductor, Inc.

What Ethernet AVB is NOT

- A physical layer discussion, e.g. OPEN Alliance BroadRReach technology
- A monolithic approach – one stop shop from one vendor (e.g. SMSC in MOST)

Freescale, the Freescale logo, AltiVec, C-5, CodeTEST, CodeWarrior, ColdFire, ColdFire+, C-Ware, the Energy Efficient Solutions logo, Kinetis, mobileGT, PEG, PowerQUICC, Processor Expert, QorIQ, Qorivva, SafeAssure, the SafeAssure logo, StarCore, Symphony and VortiQa are trademarks of Freescale Semiconductor, Inc., Reg. U.S. Pat. & Tm. Off. Airfast, BeeKit, BeeStack, CoreNet, Flexis, Layerscape, MagniV, MRC, Platform in a Package, QorIQ Qonverge, QUICC Engine, Ready Play, SMARTMOS, Tower, TurboLink, Vybrid and Xtrinsic are trademarks of Freescale Semiconductor, Inc. All other product or service names are the property of their respective owners. © 2013 Freescale Semiconductor, Inc.

AVB Software Stack

Alan Devine

Freescale, the Freescale logo, AltiVec, C-5, CodeTEST, CodeWarrior, ColdFire, ColdFire+, C-Ware, the Energy Efficient Solutions logo, Kinetis, mobileGT, PEG, PowerQUICC, Processor Expert, QorIQ, Qorivva, SafeAssure, the SafeAssure logo, StarCore, Symphony and VortiQa are trademarks of Freescale Semiconductor, Inc., Reg. U.S. Pat. & Tm. Off. Airfast, BeeKit, BeeStack, CoreNet, Flexis, Layerscape, Magnéti, MXC, Platform in a Package, QorIQ Qonverga, QUICC Engine, Ready Play, SMARTMOS, Tower, TurboLink, Vybrid and Xtrinsic are trademarks of Freescale Semiconductor, Inc. All other product or service names are the property of their respective owners. © 2013 Freescale Semiconductor, Inc.

AVB Ethernet stack summary

- IEEE 802 Ethernet Driver
  - Low level driver needed for multi queue ENET. Needs to support new features added to ENET
- IEEE 802.1AS (PTP)
  - Used to synchronise network nodes to a common time reference by defining clock master selection (BMCA) and negotiation algorithms, link delay measurement, and compenstation, and clock rate matching and adjustment mechanisms. It specifies use of IEE 1588
- IEEE 802.1 QAT (Bandwidth reservation)
  - Stream reservation protocol (SRP). Used to guarantee QoS by ensuring end to end bandwidth availability before an AV stream starts. SRP uses IEEE 802.1ak (multiple registration protocol)to pass stream descriptors and resource reservation request/results

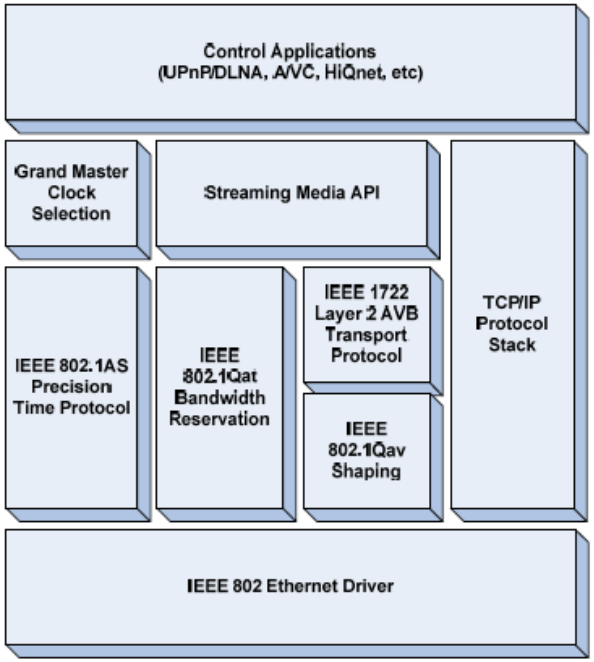

Reference: Understanding IEEE 1722 AVB Transport Protocol – AVTP, March 9, 2009, Harman International

AVB Ethernet stack summary

- IEEE 802.1 QAV (Shaping)
  - Queuing and forwarding protocol to ensure asynchronous Ethernet traffic does not interfere with steaming AVB traffic. This standard allows bridges to provide guarantees for time-sensitive (i.e. bounded latency and delivery variation), loss-sensitive real-time audio video (AV) data transmission (AV traffic). It specifies per priority ingress metering, priority regeneration, and timing-aware queue draining algorithms. This standard uses the timing derived from IEEE 802.1AS
- IEEE 1722 AVTP (Time sensitive streaming)
  - AVTP specifies methods to transport audio/video data and timing information so that audio/video content sent by a Talker can be reproduced.

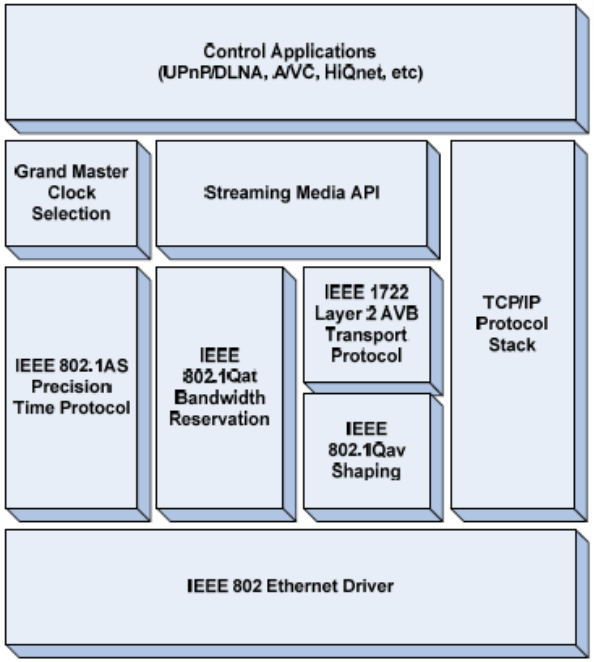

Reference: Understanding IEEE 1722 AVB Transport Protocol – AVTP, March 9, 2009, Harman International

AVB Ethernet stack summary

- IEEE 1722.1
  - IEEE P1722.1 defines the higher layer protocol for IEEE P1722 based devices. It specifies an application procedure for the AVB network systems. This standard covers
    - Service discovery – Identifies other 1722.1 capable nodes
    - device enumeration – Finds capability of other nodes?
    - connection management - Connects/disconnects virtual links between media sources/sinks
- TCP/IP?

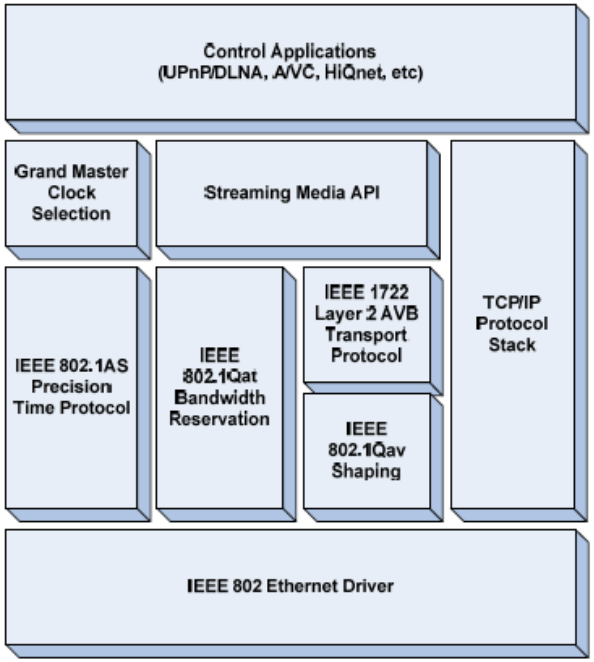

Reference: Understanding IEEE 1722 AVB Transport Protocol – AVTP, March 9, 2009, Harman International

Freescale Proposals

Freescale, the Freescale logo, AltiVec, C-5, CodeTEST, CodeWarrior, ColdFire, ColdFire+, C-Ware, the Energy Efficient Solutions logo, Kinetis, mobileGT, PEG, PowerQUICC, Processor Expert, QorIQ, Qorivva, SafeAssure, the SafeAssure logo, StarCore, Symphony and VortiQa are trademarks of Freescale Semiconductor, Inc., Reg. U.S. Pat. & Tm. Off. Airfast, BeeKit, BeeStack, CoreNet, Flexis, Layerscape, Magnéti, MXC, Platform in a Package, QorIQ Qonverga, QUICC Engine, Ready Play, SMARTMOS, Tower, TurboLink, Vybrid and Xtrinsic are trademarks of Freescale Semiconductor, Inc. All other product or service names are the property of their respective owners. © 2013 Freescale Semiconductor, Inc.

Ethernet Freescale Products

- MPC56xx/MPC57xx MCUs
  - Highest integration
  - MCU is intended as a „network interface“ to a standard processing solution (e.g. DSP or Smart Codec) **with little or no data processing**
    - e200z0 or e200z2 core based MCUs – NO data processing
    - e200z4 or e200z6 core based MCUs – little data processing
- Vybrid VFxxxR
- Mid level integration
  - Up to 400 Mhz Cortex A5 core with NEON SIMD engine and integrated ASRC (Asynchronous Sample Rate Converter) HW allow for **medium level data processing** throughput
  - i.MX6 family of applications Processors
- Lowest integration
  - Up to 4 x Cortex A9 core @ 1 GHz with NEON SIMD engine and integrated ASRC (Asynchronous Sample Rate Converter) HW allow for **very high data processing** throughput

Freescale, the Freescale logo, AMNiro, C-5, CodeTEST, CodeWarrior, ColdFire, ColdFire+, C-Ware, the Energy Efficient Solutions logo, Kinetis, mobileGT, PEG, PowerQUICC, Processor Expert, QorIQ, Qorivva, SafeAssure, the SafeAssure logo, StarCore, Symphony and VortiQa are trademarks of Freescale Semiconductor, Inc., Reg. U.S. Pat. & Tm. Off. Airfast, BeeKit, BeeStack, CoreNet, Flexis, Layerscape, MagniV, MRC, Platform in a Package, QorIQ Qonverge, QUICC Engine, Ready Play, SMARTMOS, Tower, TurboLink, Vybrid and Xtrinsic are trademarks of Freescale Semiconductor, Inc. All other product or service names are the property of their respective owners. © 2013 Freescale Semiconductor, Inc.

MPC5xxx MCUs for Ethernet Endpoint Solutions

Freescale, the Freescale logo, AltiVec, C-5, CodeTEST, CodeWarrior, ColdFire, ColdFire+, C-Ware, the Energy Efficient Solutions logo, Kinetis, mobileGT, PEG, PowerQUICC, Processor Expert, QorIQ, Qorivva, SafeAssure, the SafeAssure logo, StarCore, Symphony and VortiQa are trademarks of Freescale Semiconductor, Inc., Reg. U.S. Pat. & Tm. Off. Airfast, BeeKit, BeeStack, CoreNet, Flexis, Layerscape, Magnéti, MXC, Platform in a Package, QorIQ Qonverga, QUICC Engine, Ready Play, SMARTMOS, Tower, TurboLink, Vybrid and Xtrinsic are trademarks of Freescale Semiconductor, Inc. All other product or service names are the property of their respective owners. © 2013 Freescale Semiconductor, Inc.

Salsa 512K - MPC5604E

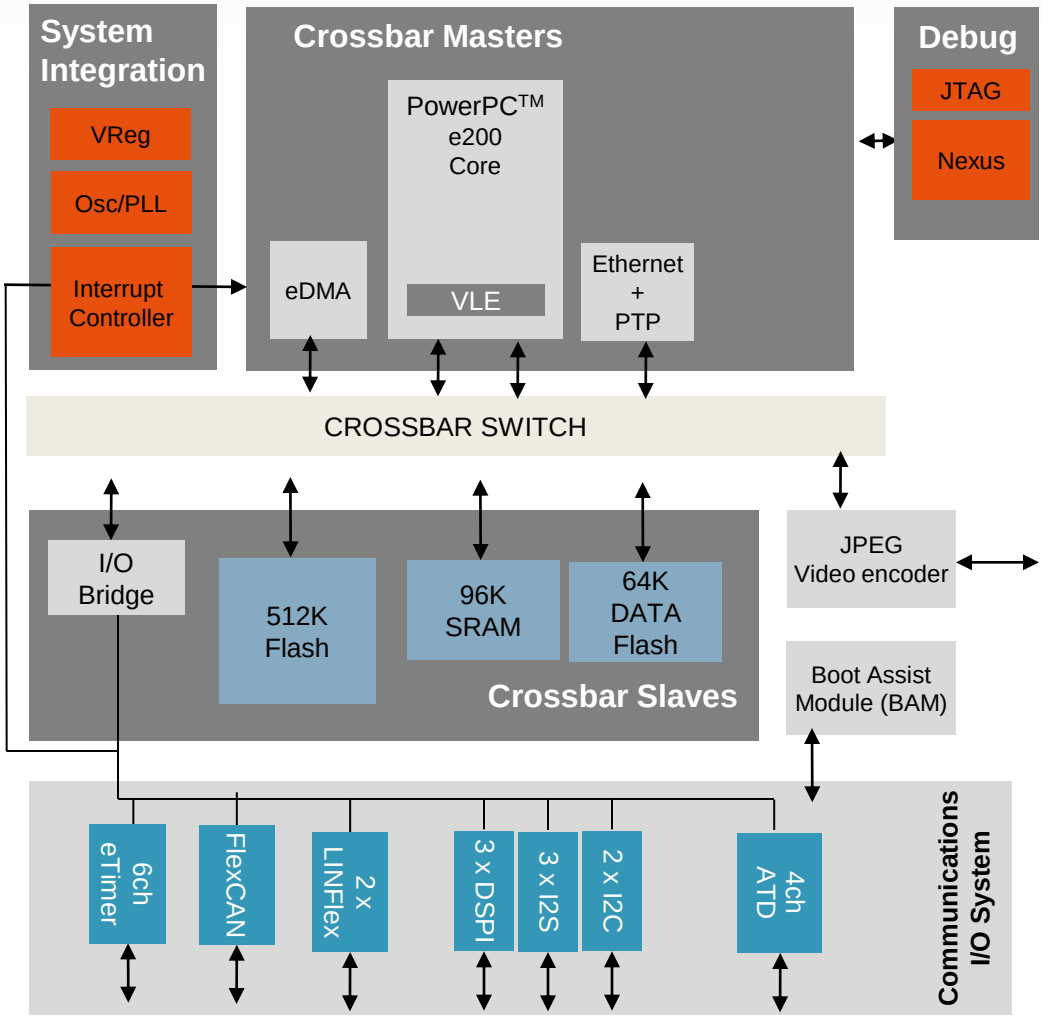

Core
up to 64 MHz PowerPC ISA e200 zen0h core

Memory
512k byte Program Flash with ECC
4x16k byte Data Flash with ECC
96 kbyte SRAM with ECC

I/O
1 x MJPEG video encoder with image sensor interface
1 x 10/100 Ethernet MAC incl. IEEE 1588 PTP support
2 x LinFlex
1 x FlexCAN
2 x I2C interface
multichannel Serial Audio interface
  up to 3 asynchronous clock rates
  up to 6 data channels
  I2S and AC97 support
3 x DSPI
1 x eTimer (6 channels for general purpose)
1 x ADC (3.3V capable)
  7 Ch, 10bit, conversion time <1µsec
  4 ext channels, 3 internal channels

System
PLL
16Ch eDMA
16MHz internal RC OSC
JTAG / Nexus Class 2+
3.3V single supply or externally supplied core voltage
64 pin LQFP package (100 pins for development)

Surround Camera Application

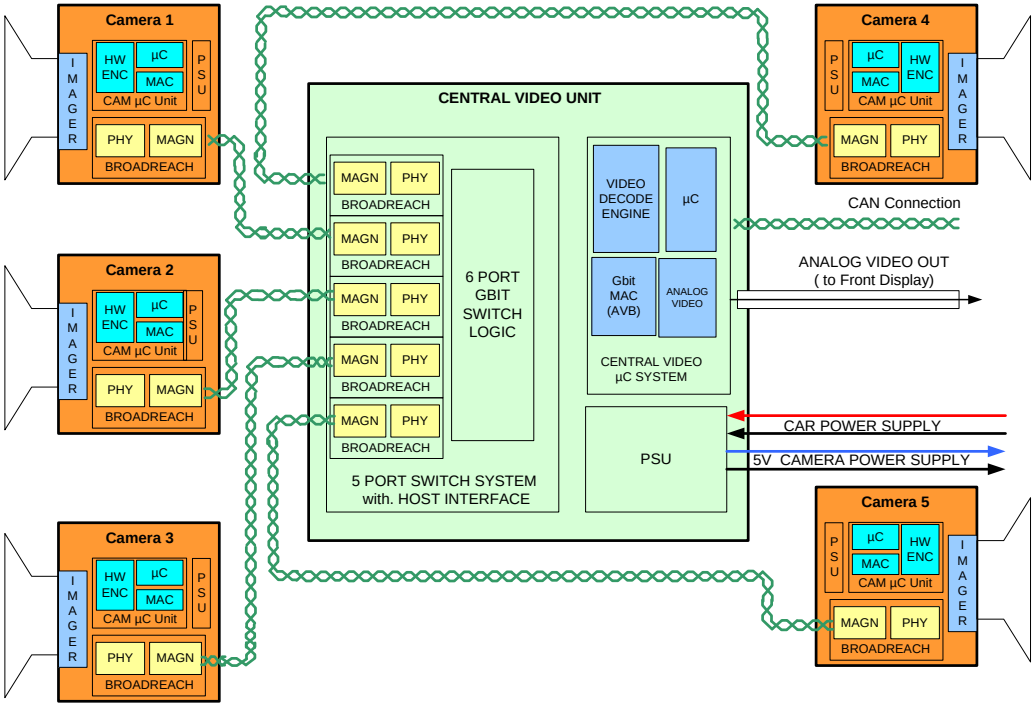

- Application is latency sensitive
- Physical Space
- Cost target
- Rough Environment

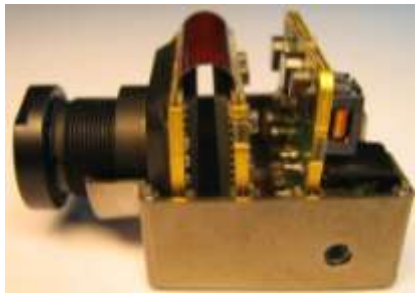

Ethernet Audio Amplifier Application

- Mixing of audio sources done at the sink
- Network is asynchronous
  - Audio sources and sinks synchronize using PTP (IEEE 1588, 802.1AS, …)

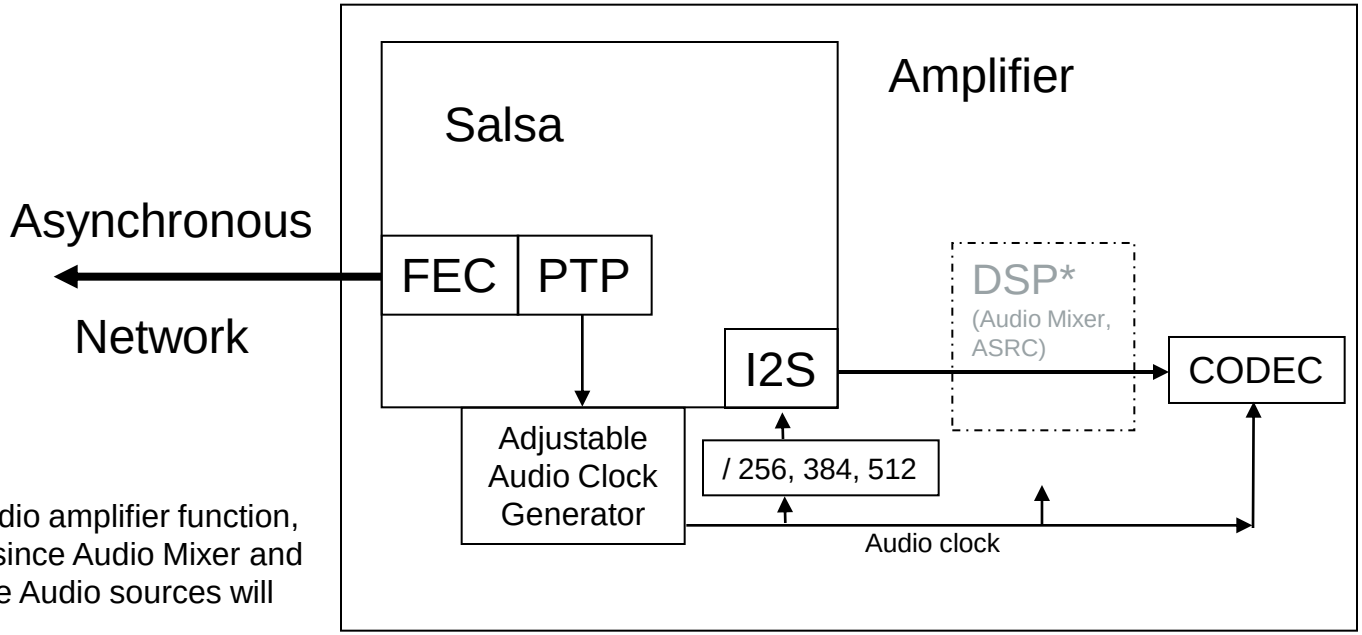

*DSP not required for pure audio amplifier function, only shown for completenes, since Audio Mixer and ASRC for different sample rate Audio sources will likely be required.

freescale™