NXP Semiconductors

User's Guide

Document Number: WCT101XALIBUG

Rev. 4.0, 05/2018

WCT1011A/WCT1013A Transmitter Library

1. Read Me First

This document describes the API of the WCT1011A/WCT1013A Wireless Charging Transmitter (WCT) library. The library enables users to evaluate the wireless charging Qi solution easily in customer applications.

This document describes library interface, software features and enables users to develop customer applications based on the WCT1011A/WCT1013A transmitter (TX) library.

2. Overview

2.1. WCT software layers

The WCT library software layers are as follows:

Contents

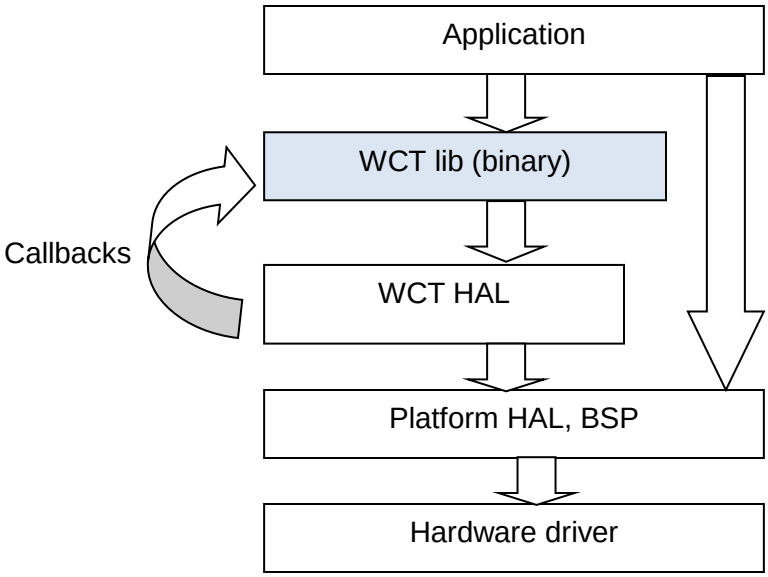

Figure 1. **WCT library software layers**

The WCT library is provided as a binary format, while the application and Board Support Package (BSP) are in the source format.

The main modules in the WCT library include:

- WCT Qi state machine
- Coil Selection
- Qi communication module
- PID power transfer control
- Foreign object detection (FOD), power loss based, and quality factor-based method
- Quick RX removal detection

The WCT library API and WCT Hardware Abstraction Layer (HAL) API are exposed in the source format, with main functions like:

- WCT library API
  - Library version retrieval
  - Library initialization
  - Library main entry function
  - Callbacks such as Qi communication interrupt callback
- WCT HAL API
  - Coil-related HAL
  - Voltage, current sensing HAL
  - Enable/Disable interrupt HAL

2.1.1. WCT software dynamics

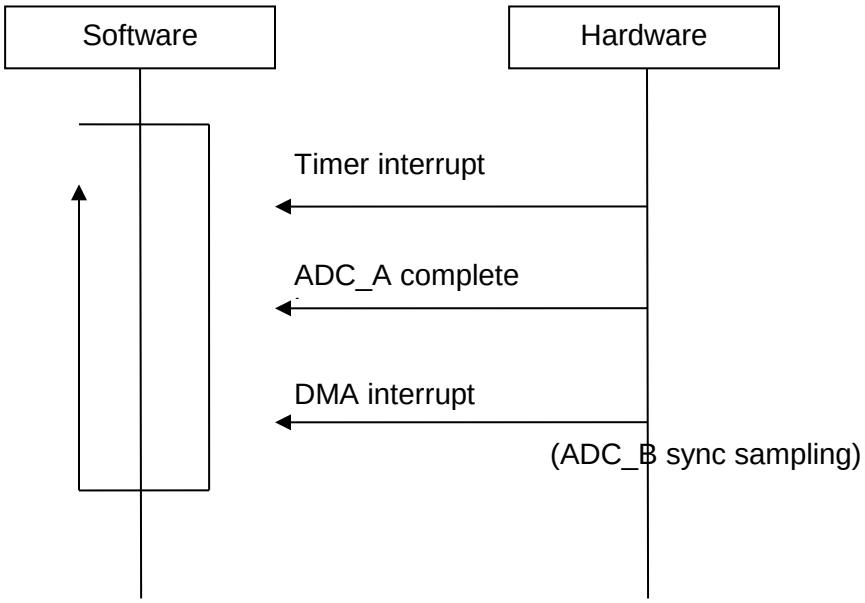

Figure 2. **DDM demodulation**

For one instance:

- ADC_B is used to sample the coil current signal, which is synchronized with the PWM frequency. This signal is used for DDM. ADC_A is used to sample the input voltage, current, and so on.
- When a block (128 samples) of coil current data is saved, an interrupt is triggered to enable the software to process in a batch for communication decoder.

3. WCT Library API

3.1. Structs and types

3.1.1. Library version

```
typedef struct
{
  uint8 bMajorVersion;
  uint8 bMinorVersion;
  uint8 bSubVersion;
}LIB_Version;
```

3.1.2. Power type

```
typedef enum
{
POWER_TYPE_ANALOG_PING = 0,
POWER_TYPE_DIGITAL_PING
}WCT_POWER_TYPE_E;
```

3.1.3. Charging type

```
typedef enum
{
  WPC_CHARGING = 0,
  PMA_CHARGING
} CHARGING_TYPE;
```

In the current library, only support WPC charging type.

3.1.4. TX charging status

```
typedef enum
{
  TX_ERROR_HALT = 0,
  TX_APP_HALT,
  TX_OBJECT_DETECTION,
  TX_COIL_SELECTION,
  TX_COIL_SELECTION_CFM,
  TX_DIGITAL_PING,
  TX_IDENTIFICATION,
  TX_CONFIGURATION,
  TX_NEGOTIATION,
  TX_CALIBRATION,
  TX_POWER_TRANSFER,
  TX_RENEGOTIATION,
  TX_RECHARGE_RETRY
} TX_CHARGING_STATUS;
```

Table 1. TX charging status

Type	Description
TX_ERROR_HALT	Chip verification failed.

TX_APP_HALT	Application stopped TX by calling WCT_Stop().
TX_OBJECT_DETECTION	TX is detecting existence of the RX.
TX_COIL_SELECTION	TX is selecting the best coil.
TX_COIL_SELECTION_CFM	TX is confirming the best coil.
TX_DIGITAL_PING	TX has found the best coil. Do digital ping as in specification.
TX_IDENTIFICATION	TX is in identification state as in specification.
TX_CONFIGURATION	TX is in configuration state as in specification.
TX_NEGOTIATION	TX is in negotiation state as in specification.
TX_CALIBRATION	TX is in calibration state as in specification.
TX_POWER_TRANSFER	TX is in power transfer state as in specification.
TX_RENEGOTIATION	TX is in re-negotiation state as in specification.
TX_RECHARGE_RETRY	TX waits some time to restart if an error occurs, unless RX is removed.

3.1.5. TX charging error

```
typedef enum
{
  TX_SUCCESS = 0,
  TX_CHIP_ERROR,
  TX_FOD_ERROR,
  TX_QFOD_ERROR,
  TX_RUNTIME_PARAM_ERROR,
  TX_CHARGE_REPEATED_FAIL
} TX_CHARGING_ERRORS;
```

Table 2. TX charging error

Type	Description
TX_SUCCESS	No error occurs.
TX_CHIP_ERROR	Chip verification failed.
TX_FOD_ERROR	FOD by power loss method.
TX_QFOD_ERROR	FOD by quality factor method.
TX_RUNTIME_PARAM_ERROR	Runtime parameter error, such as current and voltage from the application.
TX_CHARGE_REPEATED_FAIL	Repeated failure when charging an RX.

3.1.6. RX charging status

```
typedef enum
{
  RX_NONE = 0,
  RX_PREPARE_CHARGE,
  RX_CHARGING,
  RX_CHARGED,
  RX_UNDEFINE,
  RX_FAULT
} RX_CHARGING_STATUS;
```

Table 3. RX charging status

Type	Description
RX_NONE	RX is not detected yet, such as from start or reset.
RX_PREPARE_CHARGE	Can be seen as RX detected and provides user indication, during coil selection.

RX_CHARGING	Real charging, after coil selection and confirmation.
RX_CHARGED	RX sends EPT with CHARGED code.
RX_UNDEFINE	Meaningless state. For example, TX in recharge retry state.
RX_FAULT	Some RX-related errors occur.

3.1.7. RX charging error

```
typedef enum
{
  RX_SUCCESS = 0,
  RX_WPC_EPT_UNKNOWN,
  RX_WPC_EPT_INTERNAL_FAULT,
  RX_WPC_EPT_OVER_TEMP,
  RX_WPC_EPT_OVER_VOLT,
  RX_WPC_EPT_OVER_CURRENT,
  RX_WPC_EPT_BATTERY_FAILURE,
  RX_WPC_EPT_NO_RESPONSE,
  RX_WPC_EPT_RESTART_POWERTRANSFER,
  RX_WPC_EPT_NEGOTIATION_FAILURE,
  RX_WPC_EPT_RESERVED,
  RX_WPC_PACKET_INCOMPATIBLE,
  RX_WPC_PACKET_POWER_BEYOND_CAPABILITY,
  RX_WPC_PACKET_RCVPWR_TIMEOUT
} RX_CHARGING_ERRORS;
```

Table 4. RX charging error

Type	Description
RX_SUCCESS	No error occurs.
RX_WPC_EPT_UNKNOWN	EPT with “Unknown” code.
RX_WPC_EPT_INTERNAL_FAULT	EPT with “Internal Fault” code.
RX_WPC_EPT_OVER_TEMP	EPT with “Over Temperature” code.
RX_WPC_EPT_OVER_VOLT	EPT with “Over Voltage” code.
RX_WPC_EPT_OVER_CURRENT	EPT with “Over Current” code.
RX_WPC_EPT_BATTERY_FAILURE	EPT with “Battery Failure” code.
RX_WPC_EPT_NO_RESPONSE	EPT with “No Response” code.
RX_WPC_EPT_RESTART_POWERTRANSFER	EPT with “Restart Power Transfer” code.
RX_WPC_EPT_NEGOTIATION_FAILURE	EPT with “Negotiation Failure” code.
RX_WPC_EPT_RESERVED	EPT reserved packet (0x09, 0x0C-0xFF).
RX_WPC_PACKET_INCOMPATIBLE	Packet timing or content is incorrect.
RX_WPC_PACKET_POWER_BEYOND_CAPABILITY	Reported RX power level is out of TX's capability.
RX_WPC_PACKET_RCVPWR_TIMEOUT	TX does not receive Received Power Packet and exceeds the time threshold.

3.1.8. Recharge error type

```
typedef enum
{
  RECHARGETIME_RX_UNKNOWN = 0,
  RECHARGETIME_RX_CHARGE_COMPLETE,
  RECHARGETIME_RX_INTERNAL_FAULT,
  RECHARGETIME_RX_OVER_TEMP,
  RECHARGETIME_RX_OVER_VOLT,
  RECHARGETIME_RX_OVER_CURRENT,
  RECHARGETIME_RX_BATTERY_FAILURE,
  RECHARGETIME_RX_NO_RESPONSE,
  RECHARGETIME_RX_RESTART_POWERXFER,
  RECHARGETIME_RX_NEGOTIATION_FAILURE,
  RECHARGETIME_RX_POWER_BEYOND_CAPABILITY,
  RECHARGETIME_TX_RCVPWR_TIMEOUT,
  RECHARGETIME_TX_FOD_ERROR,
  RECHARGETIME_TX_QFOD_ERROR,
  RECHARGETIME_TX_CHARGE_REPEATED_FAIL
}E_RECHARGETIME_SETTYPE;
```

Table 5. Recharge error type

Type	Description
RECHARGETIME_RX_UNKNOWN	RX unknown error
RECHARGETIME_RX_CHARGE_COMPLETE	RX gets charged
RECHARGETIME_RX_INTERNAL_FAULT	RX internal fault
RECHARGETIME_RX_OVER_TEMP	RX over temperature
RECHARGETIME_RX_OVER_VOLT	RX over voltage
RECHARGETIME_RX_OVER_CURRENT	RX over current
RECHARGETIME_RX_BATTERY_FAILURE	RX battery fault
RECHARGETIME_RX_NO_RESPONSE	RX considers TX no response
RECHARGETIME_RX_RESTART_POWERXFER	RX requires restart power transfer
RECHARGETIME_RX_NEGOTIATION_FAILURE	RX negotiation failed
RECHARGETIME_RX_POWER_BEYOND_CAPABILITY	RX requires more power than TX could afford
RECHARGETIME_TX_RCVPWR_TIMEOUT	TX can not get received power packet in time(normally 23s)
RECHARGETIME_TX_FOD_ERROR	TX enter FOD status
RECHARGETIME_TX_QFOD_ERROR	TX can not pass Q factor check when charging EPP RX
RECHARGETIME_TX_CHARGE_REPEATED_FAIL	TX fails to charge RX

3.1.9. FOD parameter struct

```
typedef struct
{
	uint32 dwPowerLossLimit;
	uint16 wPowerLossTrip;
	uint16 wWaitTimeAftreTrip;
} FOD_PARAMS_T;
```

Table 6. FOD parameter struct

Type	Description
dwPowerLossLimit	Power loss threshold for FOD judgment
wPowerLossTrip	Number of continuous power loss (received power packet) exceeding threshold for judging FOD error
wWaitTimeAftreTrip	Length of time for continuous power loss exceeding threshold for judging FOD error after wPowerLossTrip

3.2. WCT library configurations

WCT_PARAM_T structure contains the library configuration parameters.

Table 7. WCT library configurations

Parameter	Description
byDeviceNum	Device number. Default value is 1. The library supports multi-transmitter in one wireless charging base station.
byCoilNumPerDevice	Number of coils for each device.
wManufacturerCode	TX manufacturer code.
wTxMaxPowerHalfWatts	TX maximum power, in half watts.
wDeviceEnableFlag	Device enable flag, with each bit corresponding to one device. Bit0 is used for device 0.
uCtrlBit	WPC_CTRL structure, with each bit for one feature enable/disable. Check the WPC_CTRL definition for details.
byTxPowerClass	TX power class.
byChargingTryNumOnOneCoilThreshold	If the number of continue charging failures/stop exceeds this threshold, TX_CHARGE_REPEATED_FAIL is triggered.
byRxRemovedConfirmDPNum	If TX cannot receive the data packet start bit and the count exceeds this threshold, TX judges that RX is removed, when uCtrlBit. bQfactorRetry=0; If TX detect Q factor change exceed the threshold and the counter exceeds this threshold, TX judge RX moved, when uCtrlBit. bQfactorRetry=1;
byAnalogPingDetectAbsoluteValue	Absolute difference for object detection during analog ping.
byAnalogPingDetectThresholdPercent	Difference percent for object detection during analog ping.
byDigitalPingRetryInterval	Forced digital ping time interval in the unit of 0.1 seconds.
wPingInterval	Ping interval for new round of analog ping, digital ping, or next digital ping during recharge retry in the unit of ms.
wAnalogPingInterval	Analog ping interval between adjacent coils in the unit of ms.
wDigitalPingInterval	Digital ping interval between adjacent coils in the unit of ms.
wDigitalPingDuration	Digital ping duration in the unit of ms.
wNextPacketTimeOut	Next packet timeout in ms, defined in specification.
wFirstPacketDuration	First packet duration in ms, defined in specification.

Parameter	Description
wMaxPacketDuration	Maximum packet duration in ms, defined in specification.
wRPPTimeOut	Received Power Packet timeout in ms, defined in specification.
wCEPTimeOut	Control Error Packet timeout in ms, defined in specification.
wMsgHeaderTimeOut	Data packet start bit timeout in ms.
wTimeForWaitNextNegotiationPacket	Next packet timeout in ms during the negotiation phase.
wQPrepareInterval	Interval between Q factor measurement and last digital ping in coil selection.
wQMeasureInterval	Interval between the Q factor measurement operations.
wRailSetupTime	Vrail voltage setup time of DCDC.
wAnalogPingPowerSetupTime	Vrail voltage setup time of analog ping power source.
wRailDischargeTime	Vrail discharge time.
wDDMStartDelayTimeAfterCharging	Interval between DDM start and charging/inverter start.
wDDMRetryTimeout	Threshold for DDM does not receive a packet. If the threshold is exceeded, DDM switches its ADC trigger position.
wSendFSKDelay	Interval between FSK responds and last packet received from RX.
wCalibrationTimeout	Timeout out for calibration phase duration.
wDefaultRailVoltageMv	An array containing the default rail voltage for each coil.
wDigitalPingDuty	Duty cycle for digital ping.
wDigitalPingPhase	Phase for digital ping.
wMaxDuty	Maximum duty cycle.
wMinDuty	Minimum duty cycle.
wMaxPhase	Maximum phase.
wMinPhase	Minimum phase.
wMaxRailVoltageMv	Maximum rail voltage in the unit of mv.
wMinRailVoltageMv	Minimum rail voltage in the unit of mv.
dwDigitalPingFreq	Digital ping frequency.
dwMaxFreq	Maximum frequency.
dwMinFreq	Minimum frequency.
dwFobAvoidFreqency	Frequency to be jumped to when keyfob is enabled.
byDigitalPinglBridgeType	Inverter bridge type for digital ping.
byNumFodTripsToIndication	Number of times FOD exceeding threshold occurs after the RPP packet is received. This starts the accumulation of the FOD confirmation time.
wLPPowerLossThresholdInOperationMode	Power loss threshold for LP Rx. Application could assign a specific value for a receiver, regardless of what this value is.
wMPPowerLossThresholdInOperationMode	Power loss threshold for MP Rx. Application could assign a specific value for a receiver, regardless of what this value is
wPowerLossThresholdInCalibLightMode	Power loss threshold for calibration light mode. If the threshold is exceeded, TX sends a NAK response to the 24-bit power packet of light mode in calibration phase from RX.
wPowerLossThresholdInCalibConnectMode	Power loss threshold for calibration connect mode. If the threshold is exceeded, TX sends a NAK response to the 24-bit power packet of light mode in calibration phase from RX.
wPowerLossIndicationToPwrCessationMs	If the FOD confirmation time exceeds this threshold, FOD error TX_FOD_ERROR occurs.
wPowerLossThresholdForLegacyRx	Power loss threshold for those receivers whose version is earlier than V1.1.
byDefaultWindowSize	Default window size if the window size is not set correctly in the configuration packet from RX.
byQfactorThresholdPercent	Threshold for the Q reported from RX.
byQfactorAdjsutPercent	Adjust value of the measured Q factor of TX.
byEffiThresholdPercentForLegacyRx	Efficiency threshold for those receivers whose version is earlier than V1.1. If both byEffiThresholdPercentForLegacyRx and PowerLossThresholdForLegacyRx are satisfied, TX considers there is FO.
pFodExternalCheck	Function pointer to customer FOD detection method.

Parameter	Description
sbyMaxErrorForLightMode	Maximum error threshold for calibration light mode. If the threshold is exceeded, TX sends a NAK response to the 24-bit power packet of light mode from RX.
sbyMinErrorForLightMode	Minimum error threshold for calibration light mode. If the threshold is exceeded, TX sends a NAK response to the 24-bit power packet of light mode from RX.
sbyMaxErrorForConnectMode	Maximum error threshold for calibration connect mode. If the threshold is exceeded, TX sends a NAK response to the 24-bit power packet of connect mode from RX.
sbyMinErrorForConnectMode	Minimum error threshold for calibration connect mode. If the threshold is exceeded, TX sends a NAK response to the 24-bit power packet of connect mode from RX.
wLightModeMaxRecvPwrThreshPercent	Maximum percent threshold of negotiated maximum power for calibration light mode. If the threshold is exceeded, TX sends a NAK response to the 24-bit power packet of connect mode from RX.
wConnectModeMaxRecvPwrThreshPercent	Maximum percent threshold of negotiated maximum power for calibration connect mode. If the threshold is exceeded, TX sends a NAK response to the 24-bit power packet of connect mode from RX.
wPowerDiffThresholdBetweenCalibrationLightAndConnect	Received power difference threshold for calibration light and connect mode. If not exceeds, the Ptx(for FOD usage) calibration will not be performed.
byNumPidAdjustmentsPerActiveWindow	Number of PID tuning within the active window after CEP packet.
byIntervalBetweenPidAdjust	Time interval between adjacent PID tunes in ms.
wOverCurrentLimitMa	Coil current over limit threshold in mA.
wRailStepMv	Rail voltage control voltage step in mV.
wRailPidScaleFactor	Rail voltage control scale factor.
wIntegralUpdateInterval	Integral item update interval in ms.
wDerivativeUpdateInterval	Derivative item update interval in ms.
swIntegralUpperLimit	PID integral item upper limit.
swIntegralLowerLimit	PID integral item lower limit.
swPidUpperLimit	PID calculation output upper limit.
swPidLowerLimit	PID calculation output lower limit.
byDefaultPidHoldTimeMs	Default power control hold-off time in ms.
byMaxPidHoldTimeMs	Maximum power control hold-off time in ms.
byActiveTimeMs	Power control active time in ms, defined in specification.
bySettleTimeMs	Power control settling time in ms, defined in specification.
byRailKp	Proportional gain for rail control.
byRailKi	Integral gain for rail control.
byRailKd	Derivative gain for rail control.
byDDMThreshold	Sensitive level for Qi communication signal judgment.
byMaxPreambleDuty	Preamble is bit ‘1’, composed by one low and one high state. It defines its maximum duty.
byMinPreambleDuty	See byMaxPreambleDuty.
byMaxPreambleCount	Maximum preamble count.
byMinPreambleCount	Minimum preamble count for a valid preamble.
wCommunicationRate	Qi communication (ASK, receiver sends to transmitter) rate.
wCommunicationRateTolerance	Tolerance of communication rate.
wCommunicationFailISRCount	Count threshold for fail to get the Qi communication signal in continues decoder calling.
wRRQDInputCurrentAbsoluteThreshold	RX removes quick detection input current absolute threshold.
wRRQDInputCurrentPercentThreshold	RX removes quick detection input current percent threshold.
wRRQDCoilCurrentAbsoluteThreshold	RX removes quick detection coil current absolute threshold.
wRRQDCoilCurrentPercentThreshold	RX removes quick detection coil current percent threshold.
tDebugConfig	Debug configuration, with each bit corresponds to one feature.
wMaxVolForLpPowerRx	Maximum rail voltage for low power RX.

Parameter	Description
wMaxVolForMpPowerRx	Maximum rail voltage for medium power RX.
wLowLoadingThreshold	Transmitted power (loading) threshold to trigger the wMaxVolForLowLoading.
wMaxVolForLowLoading	Maximum rail voltage for low loading threshold.
wHeavyLoadingThreshold	Transmitted power (loading) threshold to trigger wMinPowerFactorForHeavyLoading.
wMinPowerFactorForHeavyLoading	Power factor threshold in heavy loading defined by wHeavyLoadingThreshold. If the threshold is not exceeded, TX does not reply positive CEP.
wMaxDigitalPingTimeRefCounts	Reference count threshold for digital ping.
wFirstPacketTimeoutRefCounts	Reference count threshold for the first packet.
wNextPacketTimeoutRefCounts	Reference count threshold for interval between previous and next packets.
dwCommReferenceTimerFreq	Reference counter frequency.
dwCommReferenceTimerMaxCount	Maximum count value of the reference counter.
dwSafeDigitalPingFreq	Frequency for safe digital ping.
wSafeDigitalPingCheckTime	Duration for safe digital ping.
wSafeDigitalPingDuty	Duty cycle for safe digital ping.
wSafeDigitalPingPhase	Phase for safe digital ping.
bySafeDigitalPinglBridgeType	Inverter bridge type for safe digital ping.
wQfactorChangeThreshold	When recharge retry, TX consider RX moved when Q factor value change exceeds this threshold and the counter exceeds byRxRemovedConfirmDPNum, TX consider RX get moved when uCtrlBit. bQfactorRetry=1
wMPLRPPThreshold	Received power exceeds this threshold triggers Maximum power limit feature
wMPLHysteresis	Hysteresis of wMPLRPPThreshold for TX exit MPL status
byQfStableThreshold	TX consider the measured Q factor is stable when current and previous Q factor change is within this threshold, in unit of percentage.
byQfMeasureNum	Maximum Q factor measurement times for getting a stable Q factor
byQfAveNumForRetry	Average number for Q factor measurement during recharge retry.
byMinTxMeasuredQfToStopRetry	When TX measured Q factor is greater than this value, TX consider there is no object on TX surface, and exit recharge retry.
byMaxRxReportedQFactor	Rx reported Q factor limiter.
byFCIncPercentForLowSS	When signal strength is less than byFCSSThreshold, Tx will increase power by byFCIncPercentForLowSS after configuration packet. This feature could be disabled by set byFCSSThreshold = 0.
byFCSSThreshold	Signal strength threshold for fast charging.
byAPPRollBackWin	TX inverter input power window which rolls back, to compare with current input power. In unit of 4ms.
wAPPDumpPowerAbsoluteThreshold	Absolute dump power threshold to trigger active power protection. In unit of mW.
byAPPVolDumpScale	Voltage (Vrail) dump scale (by percent) when APP is triggered.
byAPPDumpPowerPercentageThreshold	Relative dump power threshold to trigger active power protection.

3.3. WCT library API functions

3.3.1. WCT_GetLibVer

Prototype:

```
void WCT_GetLibVer(LIB_Version *pLibVersion);
```

Description:

Gets the WCT library version.

Parameters:

pLibVersion: the data pointer for version structure

Return:

The version number is returned in the version structure pointer pLibVersion.

3.3.2. WCT_Init

Prototype:

```
void WCT_Init( void );
```

Description:

WCT library initialization. It initializes and resets the WCT internal states.

3.3.3. WCT_Run

Prototype:

```
uint16 WCT_Run( uint16 wTimePassedMs );
```

Description:

Main entry function of the WCT library. Make sure that this function is called within 1 ms interval to ensure timing requirements of Qi certification.

Parameters:

wTimePassedMs: Time elapsed since last call of this function

Return:

The time length for next WCT activity. It is used by the application to judge how long to enter low-power mode.

3.3.4. WCT_Stop

Prototype:

```
void WCT_Stop(void);
```

Description:

Stops the WCT state machine from the application. If the WCT state machine needs to be started again, call `WCT_Init()`. See the demo application.

3.3.5. WCT_CommAnalyse

Prototype:

```
void WCT_CommAnalyse(uint8 byDeviceId);
```

Description:

Library callback function of DMA interrupt for DDM only. In current implementation, when 128 samples of coil current are collected, this function is called.

Parameters:

```
byDevice: device ID
```

3.3.6. WCT_ChargeSpecificCoil

Prototype:

```
void WCT_ChargeSpecificCoil(uint8 byDeviceId, uint8 byCoilId, CHARGING_TYPE
ChargeType);
```

Description:

Application can select one coil and start charging directly without coil selection.

Parameters:

```
byDeviceId: device ID
byCoilId: coil ID
ChargeType: the type of charging; only supports WPC now
```

3.3.7. WCT_GetChargingType

Prototype:

```
CHARGING_TYPE WCT_GetChargingType(uint8 byDeviceId);
```

Description:

Gets the current charging type.

Parameters:

```
byDeviceId: device ID
```

Return:

The current charging type.

3.3.8. WCT_GetTxStatus

Prototype:

```
TX_CHARGING_STATUS WCT_GetTxStatus(uint8 byDeviceId);
```

Description:

Gets the current TX charging status.

Parameters:

```
byDeviceId: device ID
```

Return:

The current TX charging status.

3.3.9. WCT_GetTxError

Prototype:

```
TX_CHARGING_ERRORS WCT_GetTxError(uint8 byDeviceId);
```

Description:

Gets the current TX charging error.

Parameters:

```
byDeviceId: device ID
```

Return:

The current TX charging error.

3.3.10. WCT_GetRxStatus

Prototype:

```
RX_CHARGING_STATUS WCT_GetRxStatus(uint8 byDeviceId);
```

Description:

Gets the current RX charging status.

Parameters:

```
byDeviceId: device ID
```

Return:

The current RX charging status.

3.3.11. WCT_GetRxError

Prototype:

```
RX_CHARGING_ERRORS WCT_GetRxError(uint8 byDeviceId);
```

Description:

Gets the current RX charging error.

Parameters:

```
byDeviceId: device ID
```

Return:

The current RX charging error.

3.3.12. WCT_GetTxChargingMaxPower

Prototype:

```
uint16 WCT_GetTxChargingMaxPower(uint8 byDeviceId);
```

Description:

Gets the maximum power in the power contract during current charging session.

Parameters:

```
byDeviceId: device ID
```

Return:

The maximum power in the power contract during the current charging session.

3.3.13. FSK_IsBusy

Prototype:

```
uint8 FSK_IsBusy(uint8 byDeviceId);
```

Description:

Checks if TX is in the FSK process for transmitting information to RX.

Parameters:

```
byDeviceId: device ID
```

Return:

FSK module busy state. 1: busy; 0: idle.

3.3.14. FSK_ISR

Prototype:

```
void FSK_ISR(uint8 byDeviceId);
```

Description:

The function to implement FSK process for transmitting information to RX. This function is called from hardware counter interrupt.

Parameters:

```
byDeviceId: device ID
```

4. WCT Interface API

4.1. Middleware interface

4.1.1. WCT_OnWPCPacketRecv

Prototype:

```
void WCT_OnWPCPacketRecv(uint8 byDeviceId, uint8 bySize, uint8 *pbyData)
```

Description:

This is a callback function, called when a data packet is received from RX.

Parameters:

```
byDeviceId: device ID
bySize: data packet size
pbyData: data packet pointer
```

Return:

None

4.1.2. WCT_SetReChargeTimeOnAbnormal

Prototype:

```
uint32 WCT_SetReChargeTimeOnAbnormal(E_RECHARGETIME_SETTYPE eAbnormalType)
```

Description:

This is a callback function for application to configure the wait time for recharge retry.

Parameters:

eAbnormalType: check E_RECHARGETIME_SETTYPE in header file, which contains both TX error and RX errors.

Return:

Wait time for recharge retry.

4.1.3. WCT_GetFODParams

Prototype:

```
FOD_PARAMS_T* WCT_GetFODParams(PACKET_RX_INFO_T *pRxInfo, POWER_CONTRACT
*pPowerContractInfo)
```

Description:

This is a callback function to set special FOD parameters for dedicated RXs. Basically the RX manufacture ID is used for identifying the RXs.

Parameters:

`pRxInfo`: RX-related information sent from RX data packets. See PACKET_RX_INFO_T definition in header file.
`pPowerContractInfo`: Power contract related information. See POWER_CONTRACT definition in header file.

Return:

FOD parameters for dedicated RX. See FOD_PARAMS_T definition in header file.

4.1.4. WCT_UpdateDevUsrIndication

Prototype:

```
void WCT_UpdateDevUsrIndication(uint8 byDeviceId)
```

Description:

This is a callback function to set TX user indication, like LED, when certain TX or RX events occur.

Parameters:

```
byDeviceId: Device ID
```

Return:

None

4.1.5. DBG_Assert

Prototype:

```
void DBG_Assert(uint8 byAssert, uint32 dwAssertCode, uint32 dwParameter)
```

Description:

This is a debug function to identify serious bugs in library.

Parameters:

`byAssert`: Assert flag

`dwAssertCode`: Assert code, which helps to identify which part in library gets problem
`dwParameter`: Assert parameter, which is useful for debug

Return:

None

4.1.6. DBG_Warning

Prototype:

```
void DBG_Warning(uint8 byWarning, uint32 dwWarningCode, uint32 dwParameter)
```

Description:

This is a warning function to identify abnormal code routine in library.

Parameters:

`byWarning`: Warning flag
`dwWarningCode`: Warning code, which helps to identify which part of library gets warning
`dwParameter`: Warning parameter, which is useful for debug

Return:

None

4.1.7. SPRT_PrintChar

Prototype:

```
void SPRT_PrintChar(uint8 byChar)
```

Description:

This is a print function to print a char.

Parameters:

`byChar`: print character

Return:

None

4.1.8. SPRT_PrintString

Prototype:

```
void SPRT_PrintString(uint8 *pbyStr)
```

Description:

This is a print function to print a string.

Parameters:

`pbyStr`: Pointer of print string

Return:

None

4.1.9. SPRT_PrintDecChar

Prototype:

```
void SPRT_PrintDecChar(uint8 byChar)
```

Description:

This is a print function to print a character in decimal format.

Parameters:

`byChar`: Decimal value

Return:

None

4.1.10. SPRT_PrintHexChar

Prototype:

```
void SPRT_PrintHexChar(uint8 byChar)
```

Description:

This is a print function to print a character in hex format.

Parameters:

```
byChar: hex value
```

Return:

None

4.1.11. SPRT_PrintSignedDecChar

Prototype:

```
void SPRT_PrintSignedDecChar(uint8 byChar)
```

Description:

This is a print function to print a character in signed decimal format.

Parameters:

`byChar`: Signed decimal value

Return:

None

4.1.12. SPRT_PrintSignedDecWord

Prototype:

```
void SPRT_PrintSignedDecWord(uint16 wValue)
```

Description:

This is a print function to print a word variable in signed decimal format.

Parameters:

`wValue`: Variable in word

Return:

None

4.1.13. SPRT_PrintDoubleWordValue

Prototype:

```
void SPRT_PrintDoubleWordValue(uint32 dwValue)
```

Description:

This is a print function to print a double word variable in decimal format.

Parameters:

`dwValue`: variable in double word

Return:

None

4.1.14. PROT_CheckRunTimeParams

Prototype:

```
boolean PROT_CheckRunTimeParams(uint8 byDeviceId, uint8 byCoilId, TX_CHARGING_STATUS
eState, uint16 wGuaranteedPower, uint16 wTimePassedMs)
```

Description:

This is a function to check runtimes parameter, say input current, rail voltage, coil current, and input power.

Parameters:

`byDeviceId`: Device ID
`byCoilId:` Coil ID
`eState:` Charging state
`wGuaranteedPower:` Maximum negotiated guaranteed power. This value is valid only when `eState = TX_CALIBRATION, TX_POWER_TRANSFER or TX_RENEGOTIATION`.
`wTimePassedMs:` Time elapsed since last call of this function.

Return:

Abnormal status. 0: normal; 1: abnormal

4.1.15. PROT_SafeDigitalPingParamCheck

Prototype:

```
boolean PROT_SafeDigitalPingParamCheck(uint8 byDeviceId)
```

Description:

This function is called after digital ping starts for `gWCT_Params.wSafeDigitalPingCheckTime`.

Parameters:

`byDeviceId`: Device ID

Return:

Abnormal status. 0: normal; 1: abnormal

4.1.16. PROT_GetRRQDFittingInputCurrent

Prototype:

```
uint16 PROT_GetRRQDFittingInputCurrent(uint8 byDeviceId, uint8 byCoilId, uint16
wRailVoltage, uint32 dwFreq)
```

Description:

This function returns the input current at `wRailVoltage` for `byCoilId` when it works without any object on it.

Parameters:

```
byDeviceId: device id
byCoilId: coil id
wRailVoltage: rail voltage in mV
dwFreq: working frequency
```

Return:

Input current in mA

4.1.17. PROT_GetRRQDFittingCoilCurrent

Prototype:

```
uint16 PROT_GetRRQDFittingCoilCurrent(uint8 byDeviceId, uint8 byCoilId, uint16
wRailVoltage, uint32 dwFreq)
```

Description:

This function returns the coil current at wRailVoltage for byCoilId when it works without any object on it.

Parameters:

`byDeviceId`: Device ID
`byCoilId`: Coil ID

`wRailVoltage`: Rail voltage in mV
`dwFreq: working frequency`

Return:

Coil current in mA

4.1.18. ST_GetTimerTick

Prototype:

```
uint16 ST_GetTimerTick(void)
```

Description:

Returns the tick time in ms.

Parameters:

`None`

Return:

Tick time in ms.

4.1.19. ST_GetElapasedTime

Prototype:

```
uint16 ST_GetElapasedTime(uint16 wLastTick)
```

Description:

Returns the elapsed time since `wLastTick`.

Parameters:

`wLastTick`: previous time mark for tick timer

Return:

Elapsed time since `wLastTick` in `ms`.

4.1.20. ST_WaitMs

Prototype:

```
void ST_WaitMs(uint16 wNumMs)
```

Description:

Wait `wNumMs ms` in block mode.

Parameters:

`wNumMs`: wait time in `ms`

Return:

None

4.1.21. QF_QMeasurePrepare

Prototype:

```
QF_MEASURE_RESULT_E QF_QMeasurePrepare(uint8 byDeviceId, uint8 byCoilId)
```

Description:

Preparation before Q factor measurement.

Parameters:

`byDeviceId`: Device ID
`byCoilId:` Coil ID

Return:

Execution result of preparation. See `QF_MEASURE_RESULT_E`

4.1.22. QF_QMeasure

Prototype:

```
QF_MEASURE_RESULT_E QF_QMeasure(uint8 byDeviceId, uint8 byCoilId)
```

Description:

Perform measurement for Q factor of LC resonance tank.

Parameters:

`byDeviceId`: Device ID
`byCoilId:` Coil ID

Return:

Execution result of measurement. See `QF_MEASURE_RESULT_E`

4.1.23. QF_GetQFactor

Prototype:

```
QF_MEASURE_RESULT_E QF_GetQFactor(uint8 byDeviceId, uint8 byCoilId, uint32 *pFreq,
uint32* plcQ)
```

Description:

Gets the measured Q factor of LC resonance tank.

Parameters:

`byDeviceId`: Device ID
`byCoilId:` Coil ID
`pFreq:` Pointer for saving the resonance frequency
`plcQ:` Pointer for saving the Q factor of LC resonance tank

Return:

Execution result. See `QF_MEASURE_RESULT_E`

4.2. HAL interface

4.2.1. HAL_DisableIRQ

Prototype:

```
uint8 HAL_DisableIRQ(void);
```

Description:

Disables the global IRQ.

Parameters:

None

Return:

The global IRQ status before the global IRQ is disabled.

4.2.2. HAL_RestoreIRQ

Prototype:

```
void HAL_RestoreIRQ(uint8 bySts);
```

Description:

Restores the global IRQ.

Parameters:

`bySts` : The global IRQ status. 0: disable; 1: enable.

Return:

None

4.2.3. HAL_GetRailVoltage

Prototype:

```
uint16 HAL_GetRailVoltage(uint8 byDeviceId);
```

Description:

Gets the rail voltage, and it should be an average value of 4 ms window.

Parameters:

`byDeviceId` : Device ID

Return:

The rail voltage in mV.

4.2.4. HAL_GetBatteryVoltage

Prototype:

```
uint16 HAL_GetBatteryVoltage(void);
```

Description:

Gets the input voltage of board.

Parameters:

```
None
```

Return:

The board input voltage in mV.

4.2.5. HAL_GetCoilCurrent

Prototype:

```
uint16 HAL_GetCoilCurrent(uint8 byDeviceId, uint8 byCoilId);
```

Description:

Gets the coil current of coil.

Parameters:

```
byDeviceId: Device id
byCoilId: Coil id
```

Return:

The coil current(RMS) in mA.

4.2.6. HAL_GetInputCurrent

Prototype:

```
uint16 HAL_GetInputCurrent(uint8 byDeviceId);
```

Description:

Gets the input current of inverter.

Parameters:

```
byDeviceId: device id
```

Return:

The input current in mA.

4.2.7. HAL_EnableDDM

Prototype:

```
void HAL_EnableDDM(uint8 byDeviceId, uint8 byCoilId, uint8 byIsEn);
```

Description:

Enable or disable DDM operation in hardware level.

Parameters:

`byDeviceId`: Device ID
`byCoilId`: Coil ID
`byIsEn`: 0: disable; 1: enable.

Return:

None

4.2.8. HAL_AnalogPing

Prototype:

```
uint16 HAL_AnalogPing(uint8 byDeviceId, uint8 byCoilId);
```

Description:

Does analog ping and returns the result of analog ping.

Parameters:

`byDeviceId`: Device ID
`byCoilId`: Coil ID

Return:

The result of analog ping (typically represents analog variable in real word).

4.2.9. HAL_FindAdcTriggerPos

Prototype:

```
uint16 HAL_FindAdcTriggerPos(uint8 byDeviceId, uint8 byCoilId, uint8 byDiv, uint32
dwFreq, uint32 dwDuty, uint32 dwPhase);
```

Description:

Searches the valley position of the DDM signal (scaled down from resonance signal) and sets the DDM trigger position, depending on byDiv. Meanwhile it also calculates the coil current according to the DDM signal valley value, and the power factor of inverter.

Parameters:

`byDeviceId`: Device ID
`byCoilId`: Coil ID
`byDiv`: DDM trigger position setting. 0, 1: the valley position; 2: right to valley position; 3: left to valley position.

`dwFreq:` Working frequency of resonance tank
`dwDuty:` Working duty of resonance tank
`dwPhase:` Working phase (if full bridge topology) of resonance tank

Return:

The power factor of inverter.

4.2.10. HAL_SetChargingBridge

Prototype:

```
void HAL_SetChargingBridge(uint8 byDeviceId, uint8 byCoilId, uint8 byBridge);
```

Description:

Sets the topology of inverter which drives the resonance tank.

Parameters:

`byDeviceId:` Device ID
`byCoilId:` Coil ID
`byBridge:` Topology type. 0: half bridge; 1: full bridge

Return:

None

4.2.11. HAL_EnableCoilDischarge

Prototype:

```
void HAL_EnableCoilDischarge(uint8 byDeviceId, uint8 byCoilId, boolean bIsEn);
```

Description:

Discharges the resonance tank circuit (normally called when inverter/resonance tank is not working).

Parameters:

`byDeviceId:` Device ID
`byCoilId:` Coil ID
`bIsEn:` 0: not discharge; 1: discharge

Return:

None

4.2.12. HAL_EnableChargingOnCoil

Prototype:

```
void HAL_EnableChargingOnCoil(uint8 byDeviceId, uint8 byCoilId, boolean bIsEn);
```

Description:

Start/Stop to work (charging) on specific coil (inverter).

Parameters:

`byDeviceId:` Device ID
`byCoilId:` Coil ID
`bIsEn`: 0: stop charging; 1: start charging

Return:

None

4.2.13. HAL_SetChargingFreqDutyPhase

Prototype:

```
void HAL_SetChargingFreqDutyPhase(uint8 byDeviceId, uint8 byCoilId, uint32 dwFreq,
uint32 dwDuty, uint32 dwPhase);
```

Description:

Sets parameter for specific coil inverter.

Parameters:

`byDeviceId:` Device ID
`byCoilId:` Coil ID
`dwFreq:` Frequency for the inverter
`dwDuty:` Duty cycle for the inverter
`dwPhase:` Phase for the inverter (if inverter is full bridge)

Return:

None

4.2.14. HAL_EnableCoils

Prototype:

```
void HAL_EnableCoils(uint8 byDeviceId, uint8 byCoilId, boolean bIsEn);
```

Description:

Selects/de-selects specific coil (for working).

Parameters:

`byDeviceId:` Device ID
`byCoilId:` Coil ID
`bIsEn:` 0: de-select the coil; 1: select the coil

Return:

None

4.2.15. HAL_SetVrailVoltage

Prototype:

```
void HAL_SetVrailVoltage(uint8 byDeviceId, uint16 wVoltage);
```

Description:

Sets rail voltage for the specific device.

Parameters:

`byDeviceId:` Device ID
`wVoltage:` Setting voltage in unit of mV

Return:

None

4.2.16. HAL_EnableWCT

Prototype:

```
void HAL_EnableWCT(uint8 byDeviceId, boolean bIsEn);
```

Description:

Enables/Disables wireless charging relevant hardware.

Parameters:

`byDeviceId:` Device ID
`bIsEn:` 0: disable; 1: enable

Return:

None

4.2.17. HAL_GetFSKFreq

Prototype:

```
uint32 HAL_GetFSKFreq(uint8 byDeviceId, uint8 byFSKParam, uint32 dwWorkingFreq);
```

Description:

Gets the FSK modulation frequency.

Parameters:

`byDeviceId:` Device ID
`byFSKParam:` FSK parameter. BIT1-BIT0: FSK depth; BIT2: FSK polarity.
`dwWorkingFreq:` Current working frequency

Return:

The FSK modulation frequency in Hz.

4.2.18. HAL_FSKModulation

Prototype:

```
void HAL_FSKModulation(uint8 byDeviceId, uint8 byCoilId, uint32 dwFreq, uint32
dwDuty, uint32 dwPhase);
```

Description:

Sets new parameters of inverter for FSK communication.

Parameters:

`byDeviceId:` Device ID
`byCoilId:` Coil ID
`dwFreq:` New frequency for inverter
`dwDuty:` New duty cycle for inverter
`dwPhase:` New phase for inverter (if full bridge)

Return:

None

4.2.19. HAL_GetRefTimer

Prototype:

```
uint16 HAL_GetRefTimer(void);
```

Description:

Gets the reference count value of high-resolution hardware counter.

Parameters:

None

Return:

Reference count

4.2.20. HAL_GetElasedRefTime

Prototype:

```
uint32 HAL_GetElasedRefTime(uint32 dwTimeMark);
```

Description:

Gets the elapsed reference counter value since dwTimeMark.

Parameters:

`dwTimeMark:` Reference counter time mark.

Return:

Elapsed reference counter value since `dwTimeMark`

4.2.21. HAL_PreparePowerSwitch

Prototype:

```
void HAL_PreparePowerSwitch(uint8 byDeviceId);
```

Description:

Prepare work before rail voltage source switch (normally cut off all voltage source, enable rail voltage discharging).

Parameters:

`byDeviceId:` Device ID

Return:

None

4.2.22. HAL_PowerSwitch

Prototype:

```
void HAL_PowerSwitch(uint8 byDeviceId, WCT_POWER_TYPE_E ePowerType);
```

Description:

Switches/Connects rail voltage with voltage source indicated by ePowerType.

Parameters:

`byDeviceId:` Device ID
`ePowerType:` Voltage source

Return:

None

4.2.23. HAL_GetDDMBuffer

Prototype:

```
sint16* HAL_GetDDMBuffer(uint8 byDeviceId);
```

Description:

Gets the pointer of DDM buffer.

Parameters:

`byDeviceId:` Device ID.

Return:

Pointer of DDM buffer.

4.2.24. HAL_CheckFobActive

Prototype:

```
boolean HAL_CheckFobActive(void);
```

Description:

Checks the key FOB status.

Parameters:

None

Return:

FOB status. 0: none fob status; 1: fob status

4.3. Parameter interface

4.3.1. WCT_GetQFParams

Prototype:

```
QF_CALIB_PARAMS* WCT_GetQFParams(uint8 byDeviceId, uint8 byCoilId)
```

Description:

Get Q factor initial parameters

Parameters:

`byDeviceId:` Device ID

`byCoilId:` Coil ID

Return:

Pointer of Q factor parameter struct.

4.3.2. WCT_GetCharacterizatioinParams

Prototype:

```
FOD_CHARACTERIZATION_PARAMS* WCT_GetCharacterizatioinParams(uint8 byDeviceId, uint8
byCoilId, uint8 byControlType)
```

Description:

Gets the pointer of FOD calibration parameter.

Parameters:

`byDeviceId:` Device ID

`byCoilId:` Coil ID

`byControlType:` Inverter control type

Return:

Pointer of FOD calibration parameter struct.

4.3.3. WCT_GetNormalizationParams

Prototype:

```
FOD_NORMALIZATION_PARAMS* WCT_GetNormalizationParams(uint8 byDeviceId, uint8
byCoilId, uint8 byControlType)
```

Description:

Gets the pointer of normalization parameter.

Parameters:

`byDeviceId`: Device ID

`byCoilId`: Coil ID

`byControlType`: Inverter control type

Return:

Pointer of normalization parameter struct.

5. Typical Application

5.1. Demo application

Sees the demo application in the release package.

5.2. Dynamic timing analysis

For customer application performance consideration, here the WCT library dynamic timing analysis is provided.

The below data are measured on one instance, based WCT1013A, at 100 MB core clock.

For DDM, coil current signal is sampled by ADC_B synced with PWM frequency. After a block (128 samples) of coil current data is sampled, a DMA (timer) interrupt is triggered to let software to process in a batch for DDM operation. The following time count uses 2560 ns as time resolution.

- DDM filtering: 128 points to be processed once with interrupt
  Data time interval: 128 * 1/125K = 1024 µs
  Processing (WCT_CommAnalyse) counter value for WPC Qi: 112, corresponding time interval: 286 µs
- ADC_A interrupt: ADC_A is triggered every 1 ms (in tick timer interrupt), ADC_A interrupt process time can be omitted since it is slight.
- Tick timer interrupt: occurs every 1 ms, tick timer interrupt process time is slight, 10 µs - 20 µs.

- Main loop
  - Most use cases: Processing counter value ~15, corresponding time interval 38 µs
  - Rare use case: Processing counter value ~450, corresponding time interval 1152 µs. Due to DDM additional function to re-sync the sampling point when receiving a data packet, which may take 90 PWM cycles, corresponding to delay of 720 µs (90 * 1/128K).

The following figure shows the time slot of WPC Qi DDM software processing:

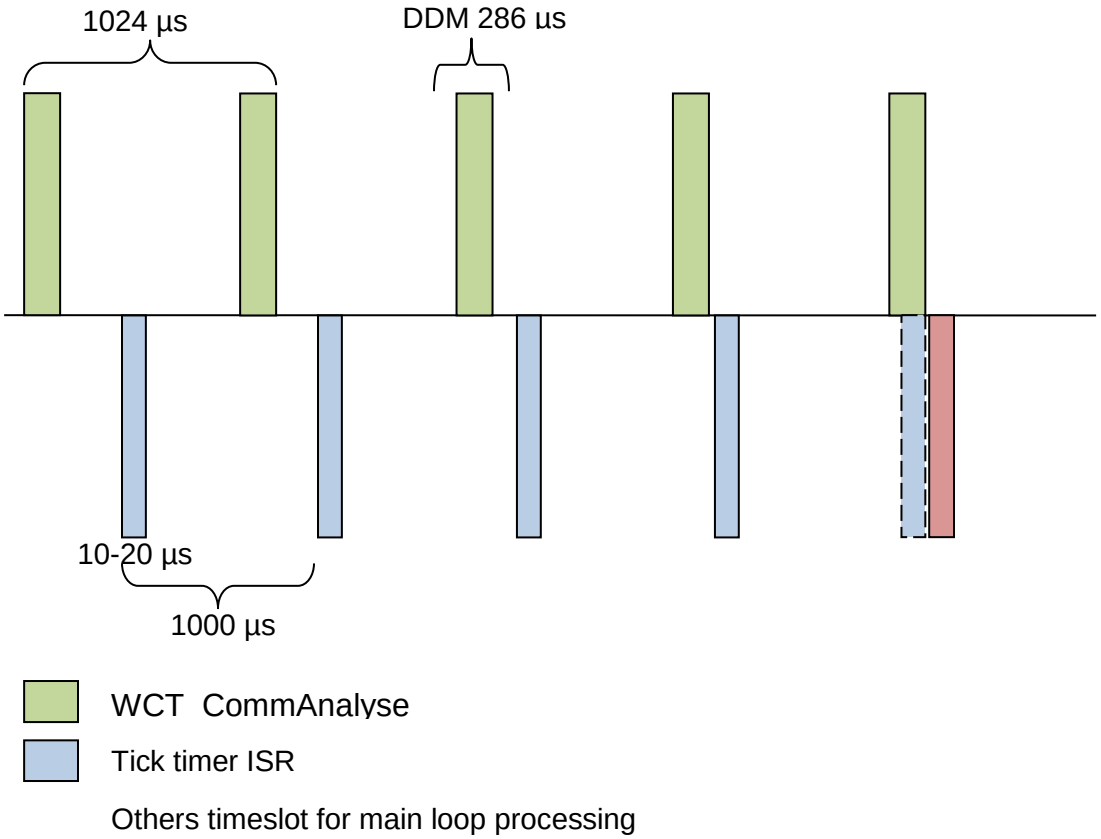

Figure 3. **Time slot of WPC Qi software processing**

6. New Features of the Library

The library has the following new features:

- Added maximum power limit function
- Support fast charging
- Code quality improvement to be MISRA-compliant
- Added FOD recharging retry based on Q factor method
- Enable fast exiting recharge retry state by Q factor method
- Improve stability of measured Q factor by carrying out multi Q factor measurement
- Added active power protection feature.

7. Revision History

The following table provides the revision history.

Table 8. Revision History

Revision number	Date	Substantive changes
GA 3.1	09/2017	Initial formal release supports the WCT1011A/WCT1013A REF board.
GA 4.0	05/2018	Update according to software changes.

How to Reach Us:

Home Page:
nxp.com

Web Support:
nxp.com/support

Document Number: WCT101XALIBUG
Rev. 4.0
05/2018