HSEVB - MC145574A Daughter Board
Rev 1.00 - 02/07/99

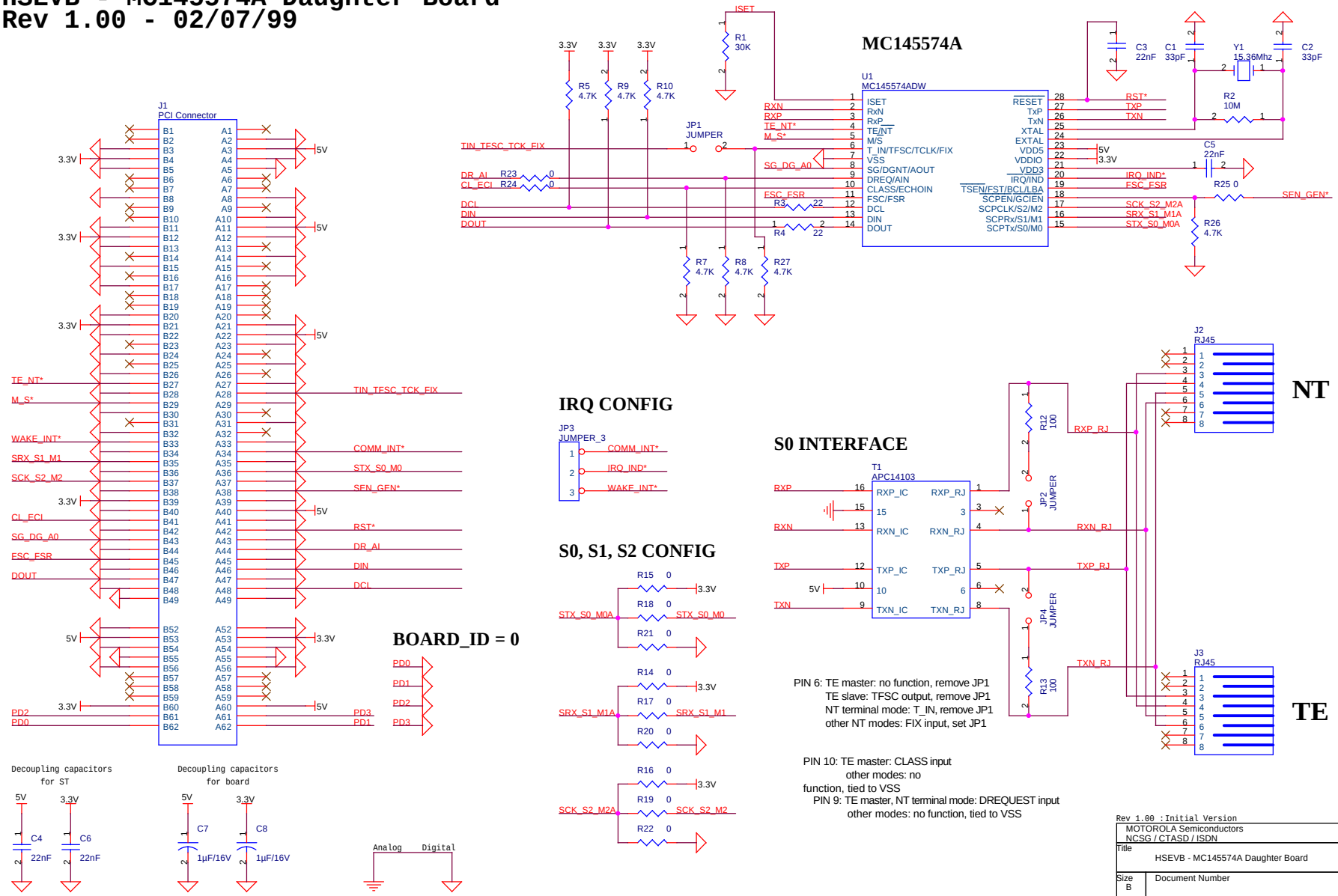

Rev 1.00 : Initial Version

MOTOROLA Semiconductors NCSG / CTASD / ISDN	Av. Eisenhower B.P. 1029 31023 TOULOUSE Cedex
Title: HSEVB - MC145574A Daughter Board	Designed by : E. Cheyron
Size: B — Document Number	Rev: 1.00
Date: Thursday, August 17, 2000	Sheet 1 of 1