Table of Contents

BLOCK DIAGRAM	Sheet 2
WIFI MODULE	Sheet 3
LPC INTERFACE 1	Sheet 4
LPC INTERFACE 2	Sheet 5
HEADER CONNECTIONS	Sheet 6

Revisions

Rev	Description	Date	Designer	Approver
X1	FIRST DRAFT	02-AUG-17	Antonio Quiroz	
X2	WiFi module in place	09-AUG-17	Antonio Quiroz	
X3	Prototype release	23-AUG-17	Antonio Quiroz	
X4	Connected P1_0 to SPI_INT_WiFi	06-OCT-17	Jorge Ramirez	
A	Released	28-NOV-17	Antonio Quiroz	

LPC540xx
IoT Module

OM40007

Microcontroller Product Group
6501 William Cannon Drive West
Austin, TX 78735-8598

This document contains information proprietary to NXP and shall not be used for engineering design, procurement or manufacture in whole or in part without the express written permission of NXP Semiconductors.

ICAP Classification: CP: X IUO: PUBI:

Designer: Jorge Ramirez	Drawing Title: OM40007		
Drawn by: Antonio Quiroz	Page Title: Table of Contents, Revisions		
Approved: CK Phua	Size C	Document Number SCH-30019, PDF: SPF-30019	Rev A
	Date: Tuesday, November 28, 2017	Sheet 1 of 6	

1. Unless Otherwise Specified:
   All resistors are in ohms, 5%
   All voltages are DC
   All polarized capacitors are aluminum electrolytic

2. Interrupted lines coded with the same letter or letter combinations are electrically connected.

3. Device type number is for reference only. The number varies with the manufacturer.

4. Special signal usage:
   _B Denotes - Active-Low Signal
   <> or [] Denotes - Vectored Signals
   Green text Denotes - Extra Notes to be considered.

5. Interpret diagram in accordance with American National Standards Institute specifications, current revision, with the exception of logic block symbology.

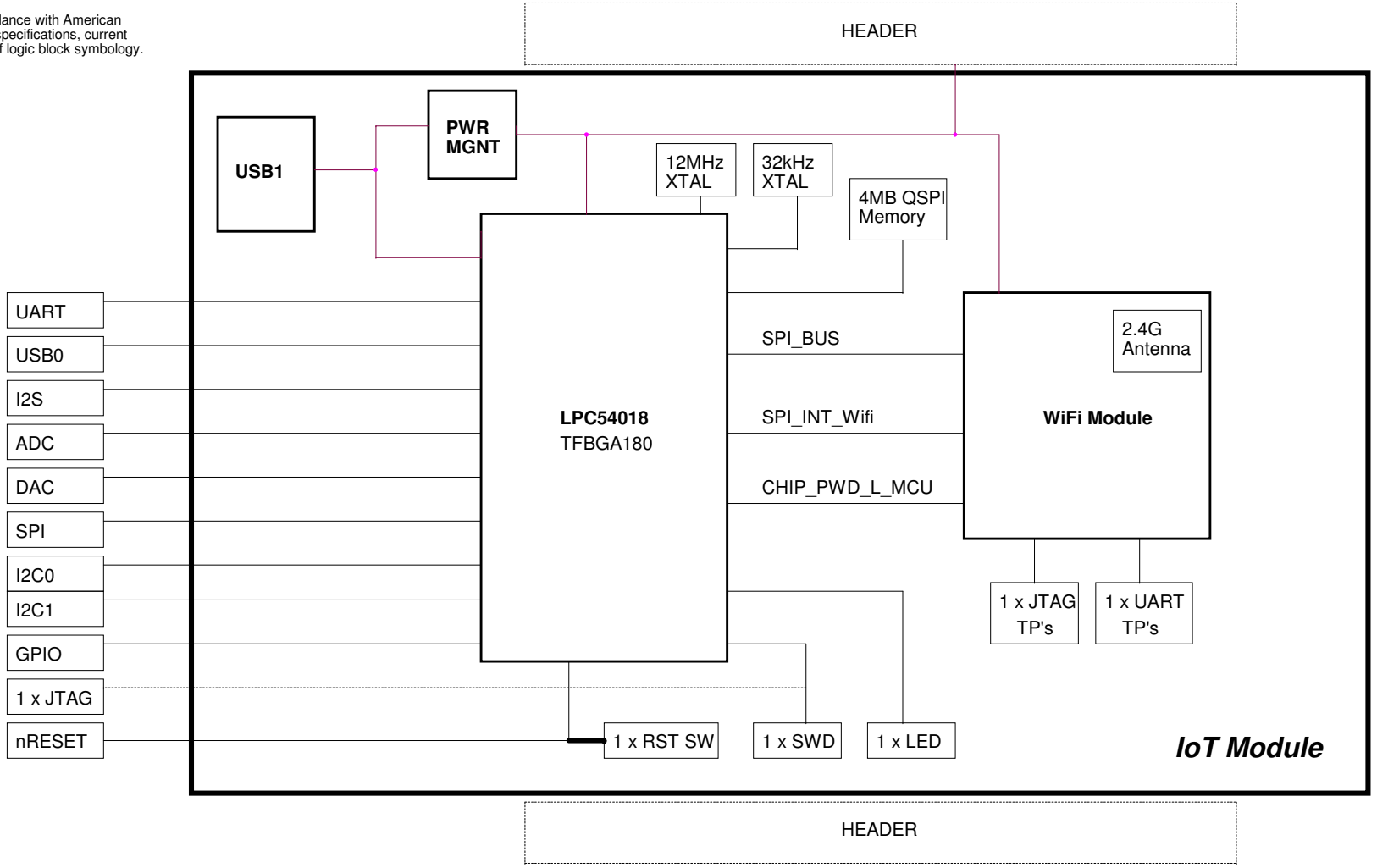

ICAP Classification:	CP: X	IUO:	PUBI:
Drawing Title:	OM40007		
Page Title:	BLOCK DIAGRAM		
Size: C	Document Number: SCH-30019, PDF: SPF-30019		Rev: A
Date: Tuesday, November 28, 2017	Sheet 2 of 6		

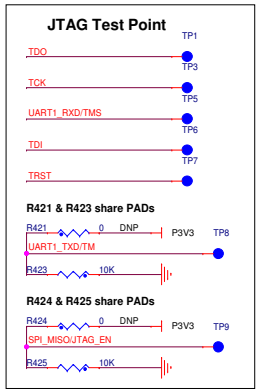

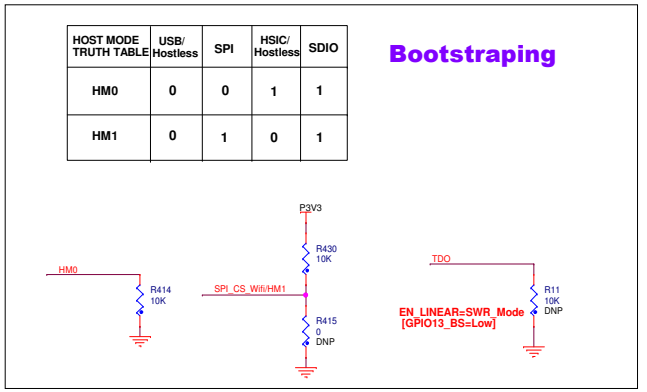

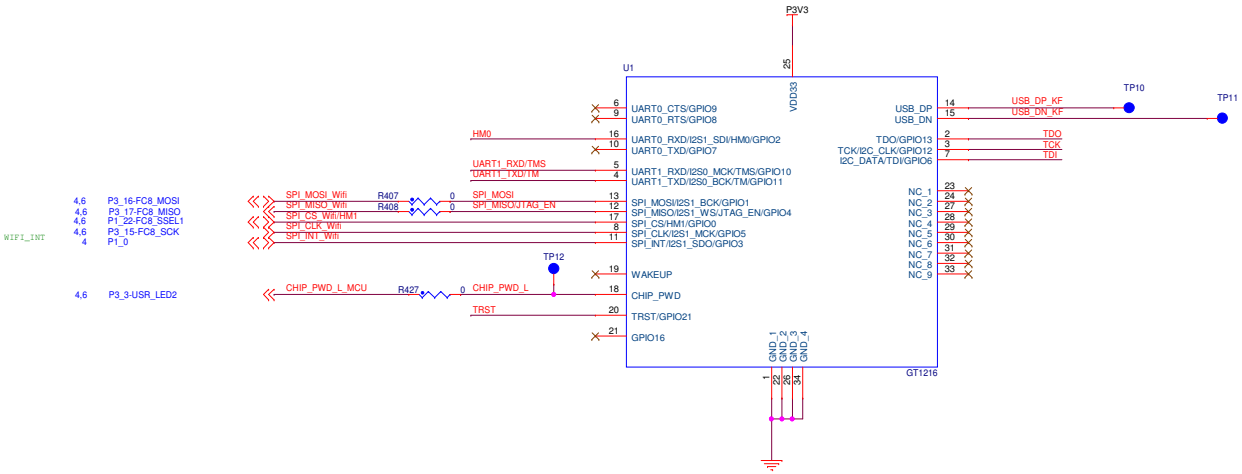

ICAP Classification:	CP: X IUO: PUBI:
Drawing Title:	OM40007
Page Title:	WIFI MODULE
Size: C	Document Number: SCH-30019, PDF: SPF-30019 Rev: A
Date: Tuesday, November 28, 2017	Sheet 3 of 6

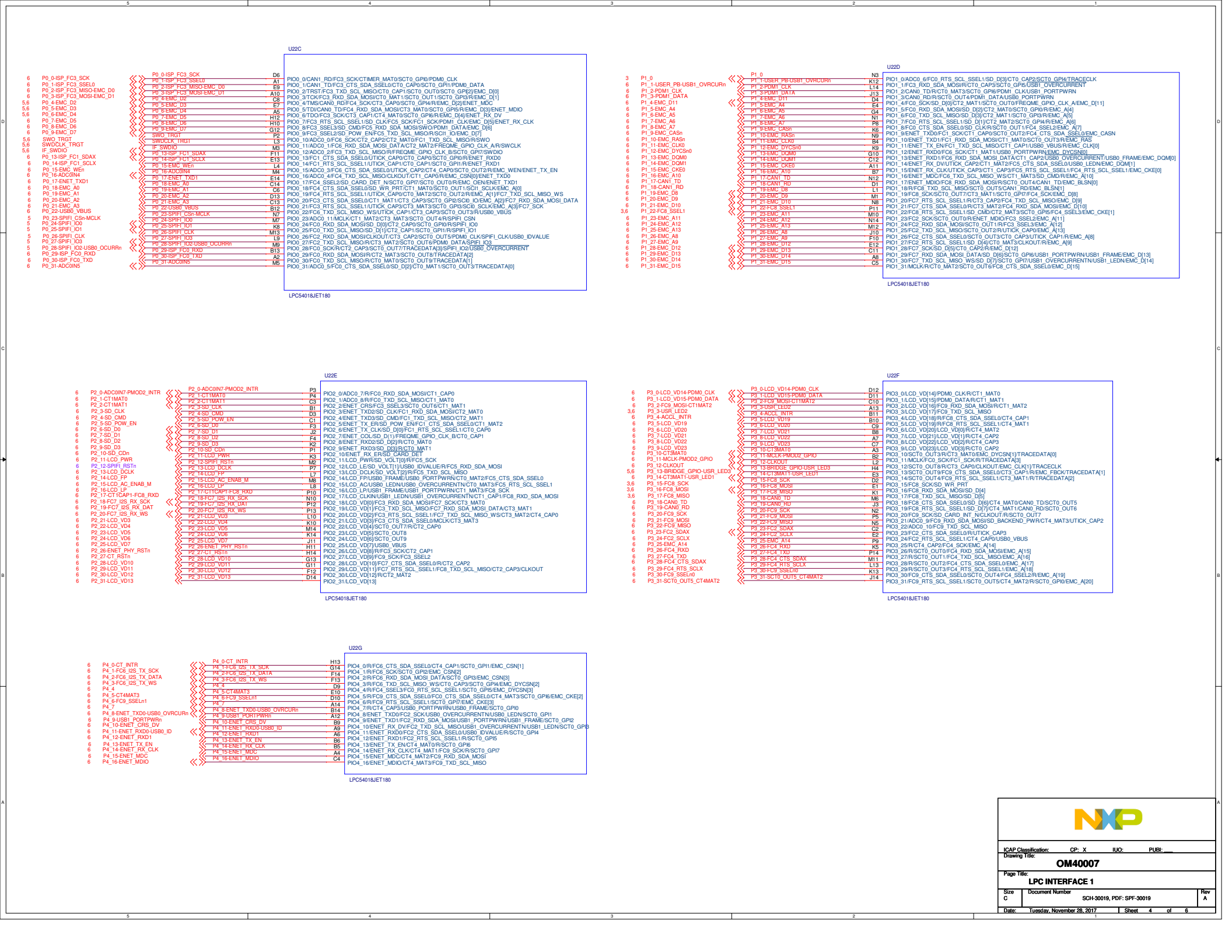
U22C
P0_0-ISP_FC3_SCK
P0_1-ISP_FC3_SSEL0
P0_2-ISP_FC3_MISO-EMC_D0
P0_3-ISP_FC3_MOSI-EMC_D1
P0_4-EMC_D2
P0_5-EMC_D3
P0_6-EMC_D4
P0_7-EMC_D5
P0_8-EMC_D6
P0_9-EMC_D7
SWO_TRGT
SWDCLK_TRGT
IF_SWDIO
P0_13-ISP_FC1_SDAX
P0_14-ISP_FC1_SCLX
P0_15-EMC_WEn
P0_16-ADC0IN4
P0_17-ENET_TXD1
P0_18-EMC_A0
P0_19-EMC_A1
P0_20-EMC_A2
P0_21-EMC_A3
P0_22-USB0_VBUS
P0_23-SPIFI_CSn-MCLK
P0_24-SPIFI_IO0
P0_25-SPIFI_IO1
P0_26-SPIFI_CLK
P0_27-SPIFI_IO3
P0_28-SPIFI_IO2-USB0_OCURRn
P0_29-ISP_FC0_RXD
P0_30-ISP_FC0_TXD
P0_31-ADC0IN5
D6
A1
E9
A10
C8
E7
A5
H12
H10
G12
P2
L3
M3
F11
E13
L4
M4
E14
C14
C6
D13
C13
B12
N7
M7
K8
M13
L9
M9
B13
A2
M5
PIO0_0/CAN1_RD/FC3_SCK/CTIMER_MAT0/SCT0_GPI0/PDM0_CLK
PIO0_1/CAN1_TD/FC3_CTS_SDA_SSEL0/CT0_CAP0/SCT0_GPI1/PDM0_DATA
PIO0_2/TRST/FC3_TXD_SCL_MISO/CT0_CAP1/SCT0_OUT0/SCT0_GPI2/EMC_D[0]
PIO0_3/TCK/FC3_RXD_SDA_MOSI/CT0_MAT1/SCT0_OUT1/SCT0_GPI3/R/EMC_D[1]
PIO0_4/TMS/CAN0_RD/FC4_SCK/CT3_CAP0/SCT0_GPI4/R/EMC_D[2]/ENET_MDC
PIO0_5/TDI/CAN0_TD/FC4_RXD_SDA_MOSI/CT3_MAT0/SCT0_GPI5/R/EMC_D[3]/ENET_MDIO
PIO0_6/TDO/FC3_SCK/CT3_CAP1/CT4_MAT0/SCT0_GPI6/R/EMC_D[4]/ENET_RX_DV
PIO0_7/FC3_RTS_SCL_SSEL1/ISD_CLK/FC5_SCK/FC1_SCK/PDM1_CLK/EMC_D[5]/ENET_RX_CLK
PIO0_8/FC3_SSEL3/SD_CMD/FC5_RXD_SDA_MOSI/SWO/PDM1_DATA/EMC_D[6]
PIO0_9/FC3_SSEL2/SD_POW_EN/FC5_TXD_SCL_MISO/R/ISCI_IO/EMC_D[7]
PIO0_10/ADC0_0/FC6_SCK/CT2_CAP2/CT2_MAT0/FC1_TXD_SCL_MISO/R/SWO
PIO0_11/ADC0_1/FC6_RXD_SDA_MOSI_DATA/CT2_MAT2/FREQME_GPIO_CLK_A/R/SWCLK
PIO0_12/ADC0_2/FC3_TXD_SCL_MISO/R/FREQME_GPIO_CLK_B/SCT0_GPI7/SWDIO
PIO0_13/FC1_CTS_SDA_SSEL0/UTICK_CAP0/CT0_CAP0/SCT0_GPI0/R/ENET_RXD0
PIO0_14/FC1_RTS_SCL_SSEL1/UTICK_CAP1/CT0_CAP1/SCT0_GPI1/R/ENET_RXD1
PIO0_15/ADC0_3/FC6_CTS_SDA_SSEL0/UTICK_CAP2/CT4_CAP0/SCT0_OUT2/R/EMC_WEN/ENET_TX_EN
PIO0_16/ADC0_4/FC4_TXD_SCL_MISO/CLKOUT/CT1_CAP0/R/EMC_CSN[0]/ENET_TXD0
PIO0_17/FC4_SSEL2/SD_CARD_DET_N/SCT0_GPI7/SCT0_OUT0/R/EMC_OEN/ENET_TXD1
PIO0_18/FC4_CTS_SDA_SSEL0/SD_WR_PRT/CT1_MAT0/SCT0_OUT1/SCI1_SCLK/EMC_A[0]
PIO0_19/FC4_RTS_SCL_SSEL1/UTICK_CAP0/CT0_MAT2/SCT0_OUT2/R/EMC_A[1]/FC7_TXD_SCL_MISO_WS
PIO0_20/FC3_CTS_SDA_SSEL0/CT1_MAT1/CT3_CAP3/SCT0_GPI2/SCI0_IO/EMC_A[2]/FC7_RXD_SDA_MOSI_DATA
PIO0_21/FC3_RTS_SCL_SSEL1/UTICK_CAP3/CT3_MAT3/SCT0_GPI3/SCI0_SCLK/EMC_A[3]/FC7_SCK
PIO0_22/FC6_TXD_SCL_MISO_WS/UTICK_CAP1/CT3_CAP3/SCT0_OUT3/R/USB0_VBUS
PIO0_23/ADC0_11/MCLK/CT1_MAT2/CT3_MAT3/SCT0_OUT4/R/SPIFI_CSN
PIO0_24/FC0_RXD_SDA_MOSI/SD_D[0]/CT2_CAP0/SCT0_GPI0/R/SPIFI_IO0
PIO0_25/FC0_TXD_SCL_MISO/SD_D[1]/CT2_CAP1/SCT0_GPI1/R/SPIFI_IO1
PIO0_26/FC2_RXD_SDA_MOSI/CLKOUT/CT3_CAP2/SCT0_OUT5/PDM0_CLK/SPIFI_CLK/USB0_IDVALUE
PIO0_27/FC2_TXD_SCL_MISO/R/CT3_MAT2/SCT0_OUT6/PDM0_DATA/SPIFI_IO3
PIO0_28/FC0_SCK/R/CT2_CAP3/SCT0_OUT7/TRACEDATA[3]/SPIFI_IO2/USB0_OVERCURRENT
PIO0_29/FC0_RXD_SDA_MOSI/R/CT2_MAT3/SCT0_OUT8/TRACEDATA[2]
PIO0_30/FC0_TXD_SCL_MISO/R/CT0_MAT0/SCT0_OUT9/TRACEDATA[1]
PIO0_31/ADC0_5/FC0_CTS_SDA_SSEL0/SD_D[2]/CT0_MAT1/SCT0_OUT3/TRACEDATA[0]
LPC54018JET180
U22D
P1_0
P1_1-USER_PB-USB1_OVRCURRn
P1_2-PDM1_CLK
P1_3-PDM1_DATA
P1_4-EMC_D11
P1_5-EMC_A4
P1_6-EMC_A5
P1_7-EMC_A6
P1_8-EMC_A7
P1_9-EMC_CASn
P1_10-EMC_RASn
P1_11-EMC_CLK0
P1_12-EMC_DYCSn0
P1_13-EMC_DQM0
P1_14-EMC_DQM1
P1_15-EMC_CKE0
P1_16-EMC_A10
P1_17-CAN1_TD
P1_18-CAN1_RD
P1_19-EMC_D8
P1_20-EMC_D9
P1_21-EMC_D10
P1_22-FC8_SSEL1
P1_23-EMC_A11
P1_24-EMC_A12
P1_25-EMC_A13
P1_26-EMC_A8
P1_27-EMC_A9
P1_28-EMC_D12
P1_29-EMC_D13
P1_30-EMC_D14
P1_31-EMC_D15
N3
K12
L14
J13
D4
E4
G4
N1
P8
K6
N9
B4
K9
G10
C12
A11
B7
N12
D1
L1
M1
N8
P11
M10
N14
M12
J10
F10
E12
C11
A8
C5
PIO1_0/ADC0_6/FC0_RTS_SCL_SSEL1/SD_D[3]/CT0_CAP2/SCT0_GPI4/TRACECLK
PIO1_1/FC3_RXD_SDA_MOSI/R/CT0_CAP3/SCT0_GPI5/USB1_OVERCURRENT
PIO1_2/CAN0_TD/R/CTG_MAT3/SCT0_GPI6/PDM1_CLK/USB1_PORTPWRN
PIO1_3/CAN0_RD/R/SCT0_OUT4/PDM1_DATA/USB0_PORTPWRN
PIO1_4/FC0_SCK/SD_D[0]/CT2_MAT1/SCT0_OUT0/FREQME_GPIO_CLK_A/EMC_D[11]
PIO1_5/FC0_RXD_SDA_MOSI/SD_D[2]/CT2_MAT0/SCT0_GPI0/R/EMC_A[4]
PIO1_6/FC0_TXD_SCL_MISO/SD_D[3]/CT2_MAT1/SCT0_GPI3/R/EMC_A[5]
PIO1_7/FC0_RTS_SCL_SSEL1/SD_D[1]/CT2_MAT2/SCT0_GPI4/R/EMC_A[6]
PIO1_8/FC0_CTS_SDA_SSEL0/SD_CLK/R/SCT0_OUT1/FC4_SSEL2/EMC_A[7]
PIO1_9/ENET_TXD0/FC1_SCK/CT1_CAP0/SCT0_OUT2/FC4_CTS_SDA_SSEL0/EMC_CASN
PIO1_10/ENET_TXD1/FC1_RXD_SDA_MOSI/CT1_MAT0/SCT0_OUT3/R/EMC_RAS
PIO1_11/ENET_TX_EN/FC1_TXD_SCL_MISO/CT1_CAP1/USB0_VBUS/R/EMC_CLK[0]
PIO1_12/ENET_RXD0/FC6_SCK/CT1_MAT1/USB0_PORTPWRN/EMC_DYCSN[0]
PIO1_13/ENET_RXD1/FC6_RXD_SDA_MOSI_DATA/CT1_CAP2/USB0_OVERCURRENT/USB0_FRAME/EMC_DQM[0]
PIO1_14/ENET_RX_DV/UTICK_CAP2/CT1_MAT2/FC5_CTS_SDA_SSEL0/USB0_LEDN/EMC_DQM[1]
PIO1_15/ENET_RX_CLK/UTICK_CAP3/CT1_CAP3/FC5_RTS_SCL_SSEL1/FC4_RTS_SCL_SSEL1/EMC_CKE[0]
PIO1_16/ENET_MDC/FC6_TXD_SCL_MISO_WS/CT1_MAT3/SD_CMD/R/EMC_A[10]
PIO1_17/ENET_MDIO/FC8_RXD_SDA_MOSI/R/SCT0_OUT4/CAN1_TD/EMC_BLSN[0]
PIO1_18/R/FC8_TXD_SCL_MISO/SCT0_OUT5/CAN1_RD/EMC_BLSN[1]
PIO1_19/FC8_SCK/SCT0_OUT7/CT3_MAT1/SCT0_GPI7/FC4_SCK/EMC_D[8]
PIO1_20/FC7_RTS_SCL_SSEL1/R/CT3_CAP2/FC4_TXD_SCL_MISO/EMC_D[9]
PIO1_21/FC7_CTS_SDA_SSEL0/R/CT3_MAT2/FC4_RXD_SDA_MOSI/EMC_D[10]
PIO1_22/FC8_RTS_SCL_SSEL1/SD_CMD/CT2_MAT3/SCT0_GPI5/FC4_SSEL3/EMC_CKE[1]
PIO1_23/FC2_SCK/SCT0_OUT0/R/ENET_MDIO/FC3_SSEL2/EMC_A[11]
PIO1_24/FC2_RXD_SDA_MOSI/SCT0_OUT1/R/FC3_SSEL3/EMC_A[12]
PIO1_25/FC2_TXD_SCL_MISO/SCT0_OUT2/R/UTICK_CAP0/EMC_A[13]
PIO1_26/FC2_CTS_SDA_SSEL0/SCT0_OUT3/CT0_CAP3/UTICK_CAP1/R/EMC_A[8]
PIO1_27/FC2_RTS_SCL_SSEL1/SD_D[4]/CT0_MAT3/CLKOUT/R/EMC_A[9]
PIO1_28/FC7_SCK/SD_D[5]/CT0_CAP2/R/EMC_D[12]
PIO1_29/FC7_RXD_SDA_MOSI_DATA/SD_D[6]/SCT0_GPI6/USB1_PORTPWRN/USB1_FRAME/EMC_D[13]
PIO1_30/FC7_TXD_SCL_MISO_WS/SD_D[7]/SCT0_GPI7/USB1_OVERCURRENTN/USB1_LEDN/EMC_D[14]
PIO1_31/MCLK/R/CT0_MAT2/SCT0_OUT6/FC8_CTS_SDA_SSEL0/EMC_D[15]
LPC54018JET180
U22E
P2_0-ADC0IN7-PMOD2_INTR
P2_1-CT1MAT0
P2_2-CT1MAT1
P2_3-SD_CLK
P2_4-SD_CMD
P2_5-SD_POW_EN
P2_6-SD_D0
P2_7-SD_D1
P2_8-SD_D2
P2_9-SD_D3
P2_10-SD_CDn
P2_11-LCD_PWR
P2_12-SPIFI_RSTn
P2_13-LCD_DCLK
P2_14-LCD_FP
P2_15-LCD_AC_ENAB_M
P2_16-LCD_LP
P2_17-CT1CAP1-FC8_RXD
P2_18-FC7_I2S_RX_SCK
P2_19-FC7_I2S_RX_DAT
P2_20-FC7_I2S_RX_WS
P2_21-LCD_VD3
P2_22-LCD_VD4
P2_23-LCD_VD5
P2_24-LCD_VD6
P2_25-LCD_VD7
P2_26-ENET_PHY_RSTn
P2_27-CT_RSTn
P2_28-LCD_VD10
P2_29-LCD_VD11
P2_30-LCD_VD12
P2_31-LCD_VD13
P3
P4
C3
B1
D3
C1
F3
J2
F4
K2
P1
K3
M2
P7
L7
M8
L8
P10
N10
P12
P13
L10
K10
M14
K14
J11
H11
H14
G13
G11
F12
D14
PIO2_0/ADC0_7/R/FC0_RXD_SDA_MOSI/CT1_CAP0
PIO2_1/ADC0_8/R/FC0_TXD_SCL_MISO/CT1_MAT0
PIO2_2/ENET_CRS/FC3_SSEL3/SCT0_OUT6/CT1_MAT1
PIO2_3/ENET_TXD2/SD_CLK/FC1_RXD_SDA_MOSI/CT2_MAT0
PIO2_4/ENET_TXD3/SD_CMD/FC1_TXD_SCL_MISO/CT2_MAT1
PIO2_5/ENET_TX_ER/SD_POW_EN/FC1_CTS_SDA_SSEL0/CT1_MAT2
PIO2_6/ENET_TX_CLK/SD_D[0]/FC1_RTS_SCL_SSEL1/CT0_CAP0
PIO2_7/ENET_COL/SD_D(1)/FREQME_GPIO_CLK_B/CT0_CAP1
PIO2_8/ENET_RXD2/SD_D[2]/R/CT0_MAT0
PIO2_9/ENET_RXD3/SD_D[3]/R/CT0_MAT1
PIO2_10/ENET_RX_ER/SD_CARD_DET
PIO2_11/LCD_PWR/SD_VOLT[0]/R/FC5_SCK
PIO2_12/LCD_LE/SD_VOLT[1]/USB0_IDVALUE/R/FC5_RXD_SDA_MOSI
PIO2_13/LCD_DCLK/SD_VOLT[2]/R/FC5_TXD_SCL_MISO
PIO2_14/LCD_FP/USB0_FRAME/USB0_PORTPWRN/CT0_MAT2/FC5_CTS_SDA_SSEL0
PIO2_15/LCD_AC/USB0_LEDN/USB0_OVERCURRENTN/CT0_MAT3/FC5_RTS_SCL_SSEL1
PIO2_16/LCD_LP/USB1_FRAME/USB1_PORTPWRN/CT1_MAT3/FC8_SCK
PIO2_17/LCD_CLKIN/USB1_LEDN/USB1_OVERCURRENTN/CT1_CAP1/FC8_RXD_SDA_MOSI
PIO2_18/LCD_VD(0)/FC3_RXD_SDA_MOSI/FC7_SCK/CT3_MAT0
PIO2_19/LCD_VD(1)/FC3_TXD_SCL_MISO/FC7_RXD_SDA_MOSI_DATA/CT3_MAT1
PIO2_20/LCD_VD(2)/FC3_RTS_SCL_SSEL1/FC7_TXD_SCL_MISO_WS/CT3_MAT2/CT4_CAP0
PIO2_21/LCD_VD(3)/FC3_CTS_SDA_SSEL0/MCLK/CT3_MAT3
PIO2_22/LCD_VD(4)/SCT0_OUT7/R/CT2_CAP0
PIO2_23/LCD_VD(5)/SCT0_OUT8
PIO2_24/LCD_VD(6)/SCT0_OUT9
PIO2_25/LCD_VD(7)/USB0_VBUS
PIO2_26/LCD_VD(8)/R/FC3_SCK/CT2_CAP1
PIO2_27/LCD_VD(9)/FC9_SCK/FC3_SSEL2
PIO2_28/LCD_VD(10)/FC7_CTS_SDA_SSEL0/R/CT2_CAP2
PIO2_29/LCD_VD(11)/FC7_RTS_SCL_SSEL1/FC8_TXD_SCL_MISO/CT2_CAP3/CLKOUT
PIO2_30/LCD_VD(12)/R/CT2_MAT2
PIO2_31/LCD_VD(13)
LPC54018JET180
U22F
P3_0-LCD_VD14-PDM0_CLK
P3_1-LCD_VD15-PDM0_DATA
P3_2-FC9_MOSI-CT1MAT2
P3_3-USR_LED2
P3_4-ACCL_INTR
P3_5-LCD_VD19
P3_6-LCD_VD20
P3_7-LCD_VD21
P3_8-LCD_VD22
P3_9-LCD_VD23
P3_10-CT3MAT0
P3_11-MCLK-PMOD2_GPIO
P3_12-CLKOUT
P3_13-BRIDGE_GPIO-USR_LED3
P3_14-CT3MAT1-USR_LED1
P3_15-FC8_SCK
P3_16-FC8_MOSI
P3_17-FC8_MISO
P3_18-CAN0_TD
P3_19-CAN0_RD
P3_20-FC9_SCK
P3_21-FC9_MOSI
P3_22-FC9_MISO
P3_23-FC2_SDAX
P3_24-FC2_SCLX
P3_25-EMC_A14
P3_26-FC4_RXD
P3_27-FC4_TXD
P3_28-FC4_CTS_SDAX
P3_29-FC4_RTS_SCLX
P3_30-FC9_SSELn0
P3_31-SCT0_OUT5_CT4MAT2
D12
D11
C10
A13
B11
B10
C9
B8
A7
C7
A3
B2
L2
H4
E3
D2
E1
K1
M6
J3
N2
P5
N5
C2
E2
P9
K5
P14
M11
L13
K13
J14
PIO3_0/LCD_VD(14)/PDM0_CLK/R/CT1_MAT0
PIO3_1/LCD_VD(15)/PDM0_DATA/R/CT1_MAT1
PIO3_2/LCD_VD(16)/FC8_RXD_SDA_MOSI/R/CT1_MAT2
PIO3_3/LCD_VD(17)/FC9_TXD_SCL_MISO
PIO3_4/LCD_VD(18)/R/FC8_CTS_SDA_SSEL0/CT4_CAP1
PIO3_5/LCD_VD(19)/R/FC8_RTS_SCL_SSEL1/CT4_MAT1
PIO3_6/LCD_VD(20)/LCD_VD(0)/R/CT4_MAT2
PIO3_7/LCD_VD(21)/LCD_VD(1)/R/CT4_CAP2
PIO3_8/LCD_VD(22)/LCD_VD(2)/R/CT4_CAP3
PIO3_9/LCD_VD(23)/LCD_VD(3)/R/CT0_CAP2
PIO3_10/SCT0_OUT3/R/CT3_MAT0/EMC_DYCSN[1]/TRACEDATA[0]
PIO3_11/MCLK/FC0_SCK/FC1_SCK/R/TRACEDATA[3]
PIO3_12/SCT0_OUT8/R/CT3_CAP0/CLKOUT/EMC_CLK[1]/TRACECLK
PIO3_13/SCT0_OUT9/FC9_CTS_SDA_SSEL0/CT3_CAP1/R/EMC_FBCK/TRACEDATA[1]
PIO3_14/SCT0_OUT4/FC9_RTS_SCL_SSEL1/CT3_MAT1/R/TRACEDATA[2]
PIO3_15/FC8_SCK/SD_WR_PRT
PIO3_16/FC8_RXD_SDA_MOSI/SD_D[4]
PIO3_17/FC8_TXD_SCL_MISO/SD_D[5]
PIO3_18/FC8_CTS_SDA_SSEL0/SD_D[6]/CT4_MAT0/CAN0_TD/SCT0_OUT5
PIO3_19/FC8_RTS_SCL_SSEL1/SD_D[7]/CT4_MAT1/CAN0_RD/SCT0_OUT6
PIO3_20/FC9_SCK/SD_CARD_INT_N/CLKOUT/R/SCT0_OUT7
PIO3_21/ADC0_9/FC9_RXD_SDA_MOSI/SD_BACKEND_PWR/CT4_MAT3/UTICK_CAP2
PIO3_22/ADC0_10/FC9_TXD_SCL_MISO
PIO3_23/FC2_CTS_SDA_SSEL0/R/UTICK_CAP3
PIO3_24/FC2_RTS_SCL_SSEL1/CT4_CAP0/USB0_VBUS
PIO3_25/R/CT4_CAP2/FC4_SCK/EMC_A[14]
PIO3_26/R/SCT0_OUT0/FC4_RXD_SDA_MOSI/EMC_A[15]
PIO3_27/R/SCT0_OUT1/FC4_TXD_SCL_MISO/EMC_A[16]
PIO3_28/R/SCT0_OUT2/FC4_CTS_SDA_SSEL0/EMC_A[17]
PIO3_29/R/SCT0_OUT3/FC4_RTS_SCL_SSEL1/EMC_A[18]
PIO3_30/FC9_CTS_SDA_SSEL0/SCT0_OUT4/FC4_SSEL2/R/EMC_A[19]
PIO3_31/FC9_RTS_SCL_SSEL1/SCT0_OUT5/CT4_MAT2/R/SCT0_GPI0/EMC_A[20]
LPC54018JET180
U22G
P4_0-CT_INTR
P4_1-FC6_I2S_TX_SCK
P4_2-FC6_I2S_TX_DATA
P4_3-FC6_I2S_TX_WS
P4_4
P4_5-CT4MAT3
P4_6-FC9_SSELn1
P4_7
P4_8-ENET_TXD0-USB0_OVRCURRn
P4_9-USB1_PORTPWRn
P4_10-ENET_CRS_DV
P4_11-ENET_RXD0-USB0_ID
P4_12-ENET_RXD1
P4_13-ENET_TX_EN
P4_14-ENET_RX_CLK
P4_15-ENET_MDC
P4_16-ENET_MDIO
H13
G14
F14
F13
D9
E10
D10
A14
B14
A12
B9
A9
A6
B6
B5
A4
C4
PIO4_0/R/FC6_CTS_SDA_SSEL0/CT4_CAP1/SCT0_GPI1/EMC_CSN[1]
PIO4_1/R/FC6_SCK/SCT0_GPI2/EMC_CSN[2]
PIO4_2/R/FC6_RXD_SDA_MOSI_DATA/SCT0_GPI3/EMC_CSN[3]
PIO4_3/R/FC6_TXD_SCL_MISO_WS/CT0_CAP3/SCT0_GPI4/EMC_DYCSN[2]
PIO4_4/R/FC4_SSEL3/FC0_RTS_SCL_SSEL1/SCT0_GPI5/EMC_DYCSN[3]
PIO4_5/R/FC9_CTS_SDA_SSEL0/FC0_CTS_SDA_SSEL0/CT4_MAT3/SCT0_GPI6/EMC_CKE[2]
PIO4_6/FC9_RTS_SCL_SSEL1/SCT0_GPI7/EMC_CKE[3]
PIO4_7/R/CT4_CAP3/USB0_PORTPWRN/USB0_FRAME/SCT0_GPI0
PIO4_8/ENET_TXD0/FC2_SCK/USB0_OVERCURRENTN/USB0_LEDN/SCT0_GPI1
PIO4_9/ENET_TXD1/FC2_RXD_SDA_MOSI/USB1_PORTPWRN/USB1_FRAME/SCT0_GPI2
PIO4_10/ENET_RX_DV/FC2_TXD_SCL_MISO/USB1_OVERCURRENTN/USB1_LEDN/SCT0_GPI3
PIO4_11/ENET_RXD0/FC2_CTS_SDA_SSEL0/USB0_IDVALUE/R/SCT0_GPI4
PIO4_12/ENET_RXD1/FC2_RTS_SCL_SSEL1/R/SCT0_GPI5
PIO4_13/ENET_TX_EN/CT4_MAT0/R/SCT0_GPI6
PIO4_14/ENET_RX_CLK/CT4_MAT1/FC9_SCK/R/SCT0_GPI7
PIO4_15/ENET_MDC/CT4_MAT2/FC9_RXD_SDA_MOSI
PIO4_16/ENET_MDIO/CT4_MAT3/FC9_TXD_SCL_MISO
LPC54018JET180
NXP
ICAP Classification:
CP: X
IUO:
PUBI:
Drawing Title:
OM40007
Page Title:
LPC INTERFACE 1
Size
C
Document Number
SCH-30019, PDF: SPF-30019
Rev
A
Date:
Tuesday, November 28, 2017
Sheet
4
of
6

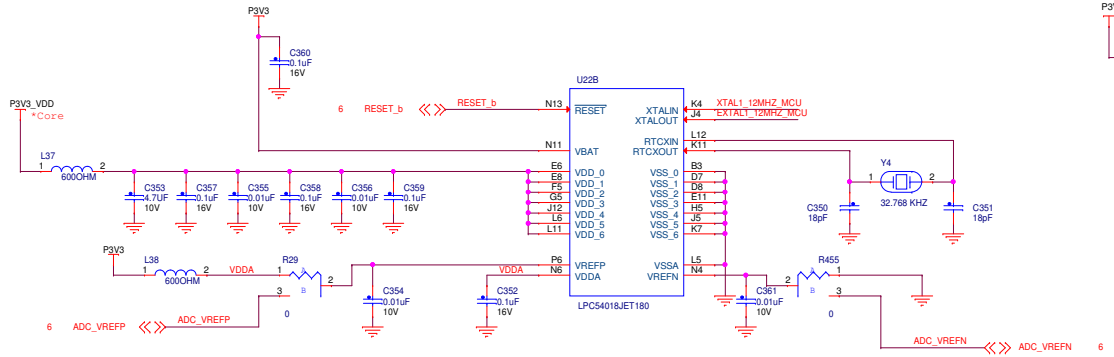

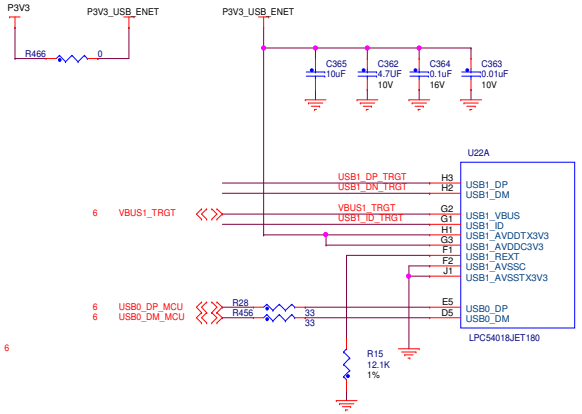

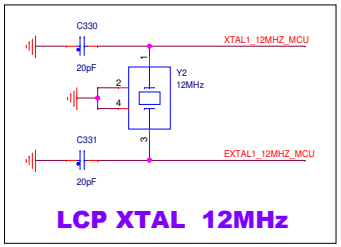

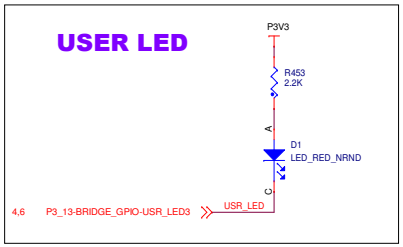

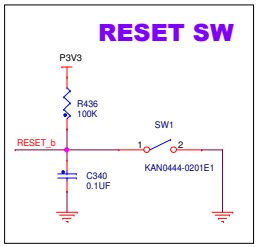

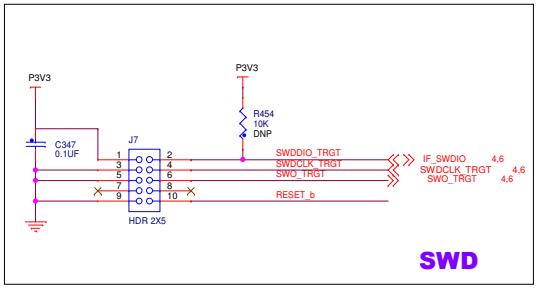

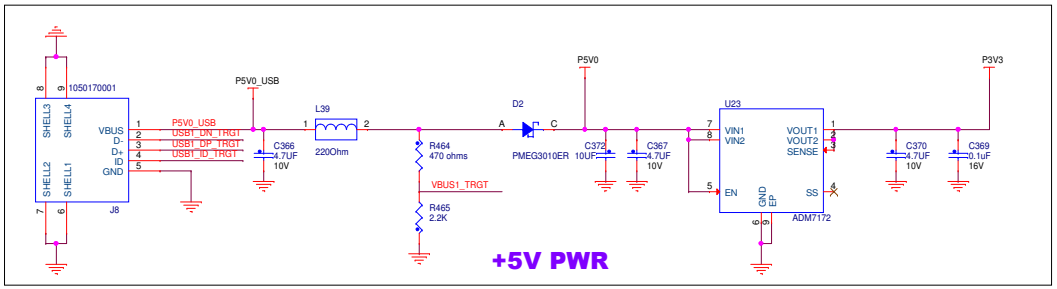

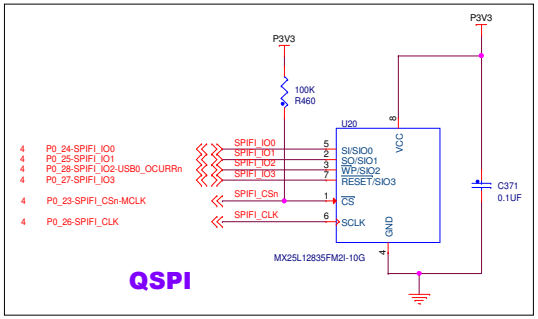

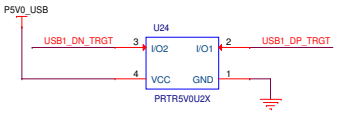

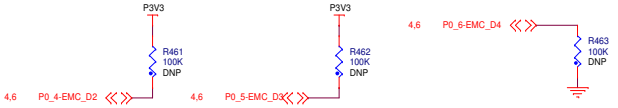

ICAP Classification: CP: X IUO: PUBI:

Drawing Title: **OM40007**

Page Title: **LPC INTERFACE 2**

Size	Document Number	Rev
C	SCH-30019, PDF: SPF-30019	A

Date: Tuesday, November 28, 2017 Sheet 5 of 6

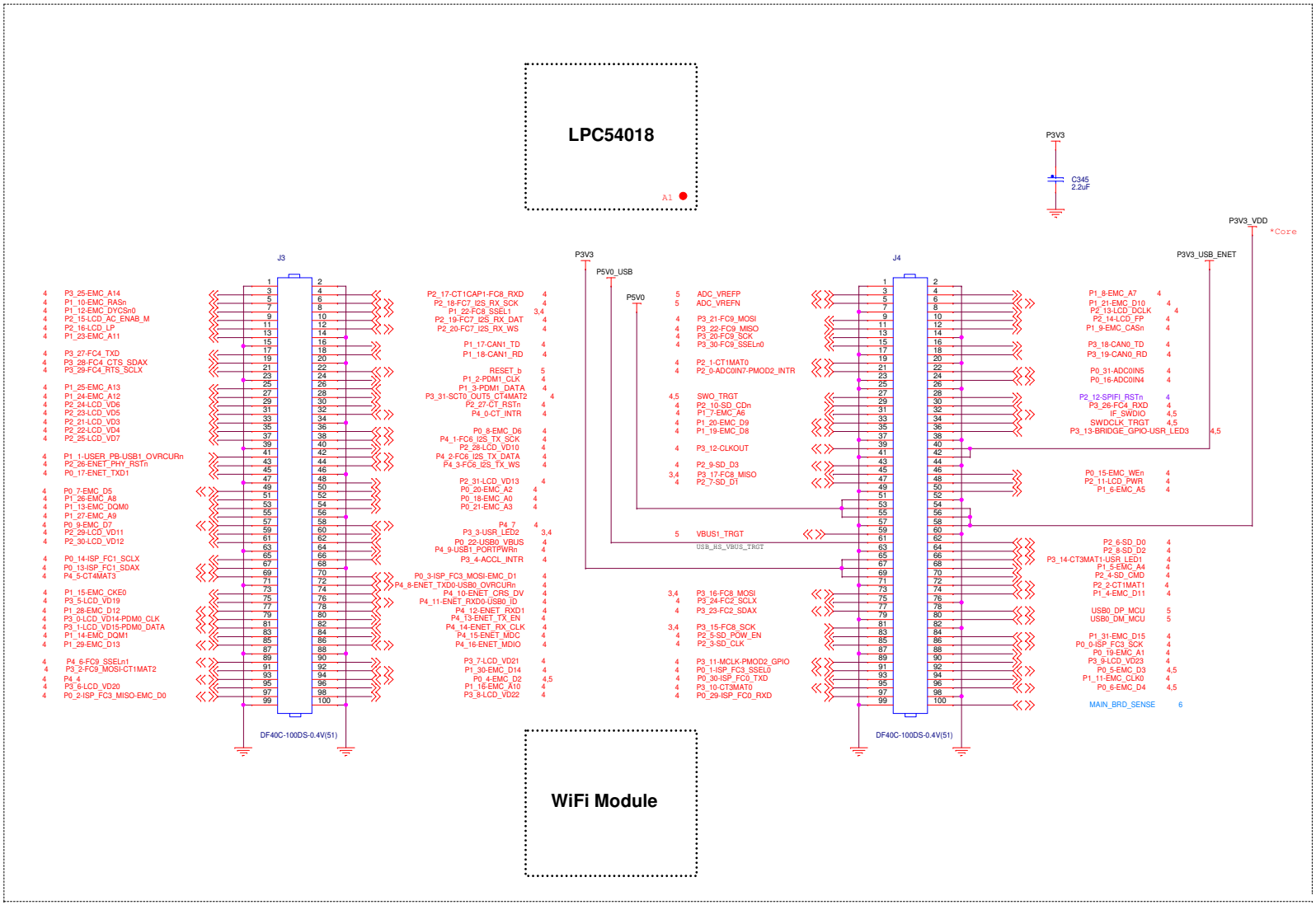

ICAP Classification: CP: X IUO: PUBI: ___

Drawing Title: **OM40007**

Page Title: **Headers**

Size	Document Number	Rev
C	SCH-30019, PDF: SPF-30019	A

Date: Tuesday, November 28, 2017 Sheet 6 of 6