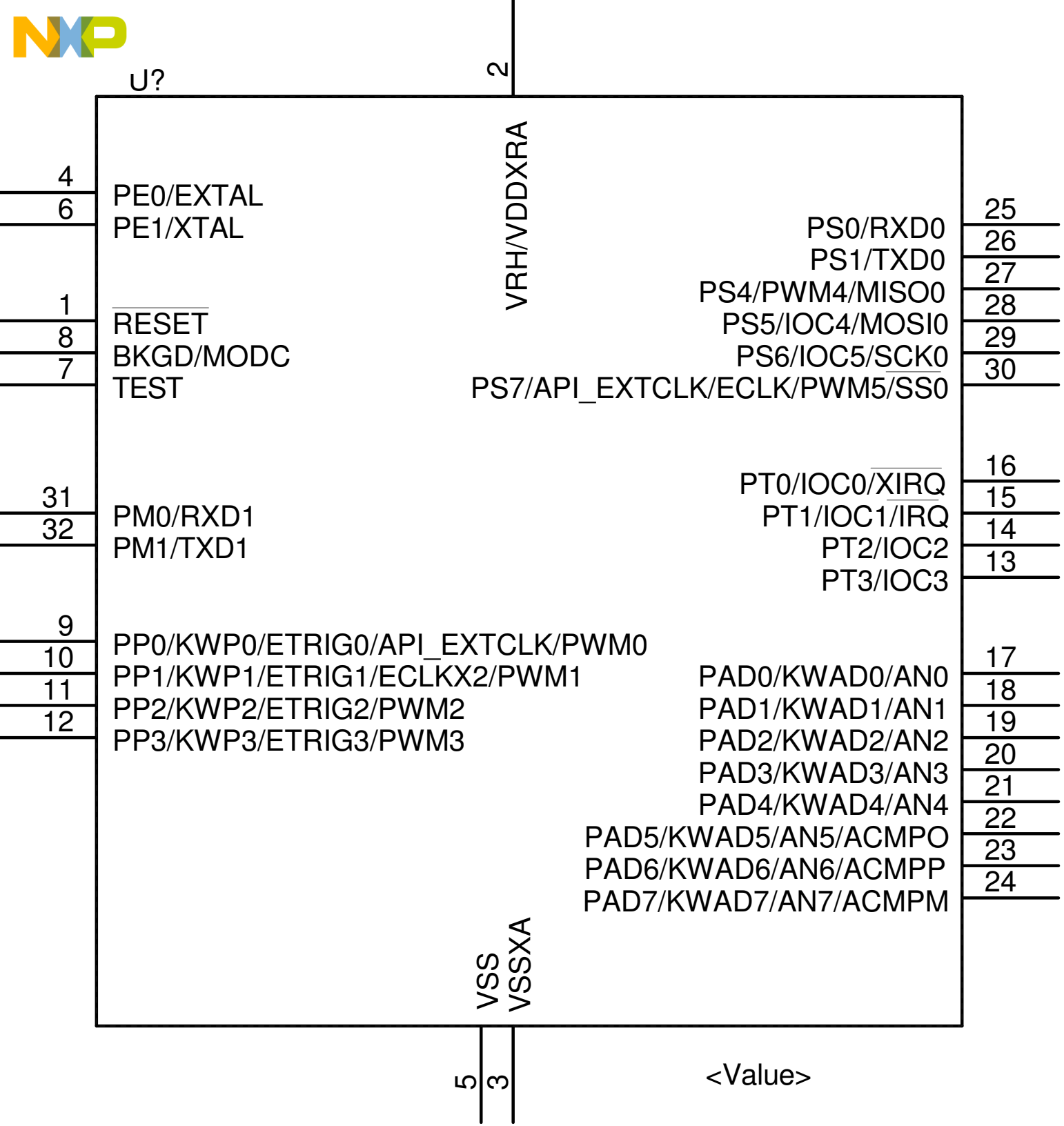
U?
2
VRH/VDDXRA
4
6
PE0/EXTAL
PE1/XTAL
1
8
7
RESET
BKGD/MODC
TEST
31
32
PM0/RXD1
PM1/TXD1
9
10
11
12
PP0/KWP0/ETRIG0/API_EXTCLK/PWM0
PP1/KWP1/ETRIG1/ECLKX2/PWM1
PP2/KWP2/ETRIG2/PWM2
PP3/KWP3/ETRIG3/PWM3
25
26
27
28
29
30
PS0/RXD0
PS1/TXD0
PS4/PWM4/MISO0
PS5/IOC4/MOSI0
PS6/IOC5/SCK0
PS7/API_EXTCLK/ECLK/PWM5/SS0
16
15
14
13
PT0/IOC0/XIRQ
PT1/IOC1/IRQ
PT2/IOC2
PT3/IOC3
17
18
19
20
21
22
23
24
PAD0/KWAD0/AN0
PAD1/KWAD1/AN1
PAD2/KWAD2/AN2
PAD3/KWAD3/AN3
PAD4/KWAD4/AN4
PAD5/KWAD5/AN5/ACMPO
PAD6/KWAD6/AN6/ACMPP
PAD7/KWAD7/AN7/ACMPM
VSS
VSSXA
5
3
<Value>